Kellow Addition

310 E. Micheltorena

ABBREVIATIONS

@	AT	LT	LIGHT
d	PENNY	MAS	MASONRY
0#	POUND	MATL	MATERIAL
AB	ANCHOR BOLT	MAX	MAXIMUM
AC	ASPHALTIC CONCRETE	MB	MACHINE BOLT
A/C	AIR CONDITIONING	MECH	MECHANICAL
AL	ALUMINUM	MEMB	MEMBRANE
AD	ANODIZED	MET	METAL
AW	AWNING	MFR	MANUFACTURER
BD	BOARD	MIN	MINIMUM
BF	BIFOLD	MISC	MISCELLANEOUS
BLDG	BUILDING	N	NORTH
BLK(G)	BLOCK(ING)	(N)	NEW
BM	BEAM	NIC	NOT IN CONTRACT
BN	BOUNDARY NAILING	NO OR #	NUMBER
BOT	BOTTOM	NTS	NOT TO SCALE
CB	CATCH BASIN	OC	ON CENTER
CI	CAST IRON	OH	OVAL HEAD OR OVER HEAD
CJ	CEILING JOIST	OPNG	OPENING
CLG	CEILING	PERF	PERFORATED
CL	CLOSET	PF	PRE FINISHED
CLR	CLEAR	PL	PLATE OR PROPERTY LINE
CMU	CONCRETE MASONRY UNIT	PLAM	PLASTIC LAMINATE
CO	CLEAN OUT	PLAS	PLASTER
COL	COLUMN	PLYWD	PLYWOOD
CONN	CONNECTION	PMTR	PERIMETER
CONT	CONTINUOUS	PT	PAINT
CS	CASEMENT	PR	PAIR
CSK	COUNTERSINK	PTDF	PRESSURE TREATED DOUGLAS FIR
DF	DOUGLAS FIR	RD	ROOF DRAIN
DH	DOUBLE HUNG	RH	ROUND HEAD
DIA	DIAMETER	RM	ROOM
DN	DOWN	RO	ROUGH OPENING
DS	DOWNSPOUT	RWD	REDWOOD
DWG	DRAWING	SCHED	SCHEDULE(D)
E	EAST	SCW	SOLID CORE WOOD
(E)	EXISTING	S	SOUTH
EA	EACH	SF	SQUARE FEET
EJ	EXPANSION JOINT	SH	SINGLE HUNG
ELEV	ELEVATION	SHT	SHEET
EN	EDGE NAIL	SHTHG	SHEATHING
EQ	EQUAL	SIM	SIMILAR
EQUIP	EQUIPMENT	SMACNA	RE: THE ARCH SHEET METAL MANUAL
FAU	FORCED AIR UNIT	STRUC	STRUCTURAL
FBO	FURNISHED BY OWNER OR OTHERS, TO BE INSTALLED BY CONTRACTOR	SPEC	SPECIFICATION
FD	FLOOR DRAIN	SQ	SQUARE
FE(C)	FIRE EXTINGUISHER (& CABINET)	S/S	STAINLESS STEEL
	FLOOR DRAIN	ST	STAIN
FF	FINISHED FLOOR	STD	STANDARD
FG	FINISHED GRADE	STL	STEEL
FH	FLAT HEAD	TC	TOP OF CURB OR TOP OF CONCRETE
FIN	FINISH	TCB	TOP OF CATCH BASIN
FL	FLOW LEVEL	T&G	TONGUE AND GROOVE
FLG	FLASHING	THRU	THROUGH
FLR	FLOOR	TMP	TEMPERED
FN	FIELD NAILING	TP	TOP OF PAVING
FOC	FACE OF CONCRETE	TW	TOP OF WALL
FOF	FACE OF FINISH	TYP	TYPICAL (ITEMS TYPICAL UNLESS SHOWN OR NOTED OTHERWISE)
FOM	FACE OF MASONRY	UNO	UNLESS NOTED OTHERWISE
FOP	FACE OF PLYWOOD	UV	ULTRAVIOLET BLOCKING GLASS
FOS	FACE OF STUD	VCT	VINYL COMPOSITION TILE
FR	FRENCH DOOR	VERT	VERTICAL
FT	FOOT OR FEET	VGDF	VERTICAL GRAIN DOUGLAS FIR
FX	FIXED	VTR	VENT THRU ROOF
GA	GAUGE	W	WEST
GALV	GALVANIZED	WC	WATER CLOSET
GYP	GYPSUM	WD	WOOD
HB	HOSE BIBB	WH	WATER HEATER
HCW	HOLLOW CORE WOOD	WP	WATERPROOF
HM	HOLLOW METAL	WS	WOOD SCREW
HP	HORSE POWER	WWF	WELDED WIRE FABRIC
HR	HOUR	W/	WITH
HTR	HEATER	W/O	WITHOUT
HVAC	HEATING/ VENTILATION/ AIR CONDITIONING		
HW(R)	HOT WATER (RETURN)		
INV	INVERT		
LAG	LAMINATED GLASS		
LAM	LAMINATE		
LB	LAG BOLT		

GENERAL NOTES

1. ALL WORK, MATERIAL, METHODS, ETC. SHALL CONFORM TO ALL GOVERNING BUILDING CODES AND REGULATIONS CURRENTLY IN EFFECT.
2. THE "GENERAL CONDITIONS OF THE CONTRACT FOR CONSTRUCTION" AIA DOCUMENT A201, LATEST VERSION, SHALL BE PART OF THESE PLANS AND SPECIFICATIONS.
3. IT SHALL BE THE RESPONSIBILITY OF THE GENERAL CONTRACTOR TO ENSURE THAT ALL SAFETY LAWS ARE STRICTLY ENFORCED AND TO MAINTAIN A SAFE CONSTRUCTION PROJECT. INSTALL TEMPORARY BRACING AND SHORING AS REQUIRED TO GUARANTEE THE SAFETY OF THE WORK UNTIL IT IS IN ITS COMPLETED FORM.
4. THE ARCHITECT SHALL BE NOTIFIED IMMEDIATELY OF ANY DISCREPANCIES OR INCONSISTENCIES DISCOVERED IN THE DRAWINGS AND/OR SPECIFICATIONS. IN THE EVENT OF DISCREPANCIES BETWEEN ANY DRAWINGS AND/OR SPECIFICATIONS, THE COSTLIER OR MORE RESTRICTIVE CONDITION SHALL BE DEEMED THE CONTRACT REQUIREMENT, UNLESS OTHERWISE APPROVED IN WRITING BY THE ARCHITECT.
5. THE GENERAL CONTRACTOR SHALL BE RESPONSIBLE FOR COORDINATION BETWEEN ALL SUB-CONTRACTORS.
6. THE GENERAL CONTRACTOR SHALL BE RESPONSIBLE FOR COORDINATION OF ALL UNDERGROUND UTILITIES.
7. THE CONTRACTOR AND SUBCONTRACTORS SHALL VISIT THE SITE AND FAMILIARIZE THEMSELVES WITH ALL EXISTING CONDITIONS PRIOR TO BID. ON SITE VERIFICATION OF ALL (E) DIMENSIONS AND CONDITIONS SHALL BE THE RESPONSIBILITY OF THE CONTRACTOR AND/OR SUB-CONTRACTOR.
8. GENERAL NOTES AND TYPICAL DETAILS SHALL APPLY TO ALL PARTS OF THE JOB, EXCEPT WHERE THEY MAY CONFLICT WITH SPECIFIC DETAILS AND NOTES. WHERE CONDITIONS ARE NOT SPECIFICALLY INDICATED AND TYPICAL DETAILS DO NOT APPLY, THE CONTRACTOR SHALL NOTIFY THE ARCHITECT IMMEDIATELY.
9. ALL DIMENSIONS TYPICALLY TO FACE OF STUD (F.O.S.) UNLESS NOTED OTHERWISE. ALL OPENINGS DIMENSIONED TO CENTERLINE OF OPENING. PLYWOOD AT EXTERIOR WALLS SHALL ALIGN WITH FACE OF CONCRETE FOOTING. "FINISHED FLOOR" INDICATES TOP OF STRUCTURAL CONCRETE SLAB OR PLYWOOD DECK.
10. NOTED DIMENSIONS TAKE PRECEDENCE OVER SCALE. LARGER SCALE DRAWINGS TAKE PRECEDENCE OVER SMALLER SCALE.
11. CARPENTRY SHALL BE IN ACCORDANCE WITH CHAPTER 23, C.B.C.
12. ALL COVER PLATES, GRILLS, AND EXPOSED ELECTRICAL FITTINGS TO BE WHITE, UNLESS NOTED OTHERWISE.
13. ALL PENETRATIONS OF 1-HOUR FIRE RESISTIVE CONSTRUCTION SHALL BE PROTECTED WITH APPROVED FIRE ASSEMBLIES.
14. THE GENERAL CONTRACTOR SHALL PROVIDE ALL NECESSARY CEILING, BASEMENT, UNDERFLOOR OR WALL ACCESS PANELS AS REQUIRED BY GOVERNING AGENCIES FOR VENTILATION, CRAWLSPACE AND ATTIC ACCESS, AIR CONDITIONING, PLUMBING, FIRE SPRINKLER AND ELECTRICAL SYSTEMS. PROVIDE RATED ASSEMBLIES WHERE REQUIRED.
15. ARCHITECT IS NOT RESPONSIBLE FOR MOLD ENCOUNTERED DURING OR AFTER CONSTRUCTION. MOLD & MILDEW OCCURS NATURALLY IN THE ENVIRONMENT. CONTRACTOR TO PROVIDE PROPER VENTILATION, PROPERLY DRIED WOOD, VAPOR BARRIERS, AS WELL AS MATERIALS THAT "BREATHE" TO AVOID MOLD FROM OCCURING. NOTIFY ARCHITECT OF ANY DISCREPANCIES OR CONDITIONS IN PLANS THAT COULD LEAD TO MOLD OCCURANCE PRIOR TO CONSTRUCTION.
16. HANDICAPPED ACCESSIBILITY:
    THE INTERNATIONAL SYMBOL OF ACCESSIBILITY SHALL BE THE STANDARD USED TO IDENTIFY FACILITIES THAT ARE ACCESSIBLE TO AND USABLE BY PHYSICALLY DISABLED PERSONS AS SET FORTH IN TITLE 24 CAC AND ADA TITLE III STANDARDS. THE SYMBOL SPECIFIED SHALL CONSIST OF A WHITE FIGURE ON A BLUS BACKGROUND. THE BLUE SHALL BE EQUAL TO COLR NO, 15090 IN FED. STANDARD 595A.

    THE CENTER OF RECEPTACLE OUTLETS SHALL BE NOT LESS THAN 15" ABOVE THE FLOOR OR WORKING PLATFORMS. ALL LIGHT SWITCHES AND THERMOSTATS SHALL BE MOUNTED NO MORE THAN 48" ABOVE FINISHED FLOOR ELEVATION.

    ALL RAMPS SHALL HAVE A MEDIUM BROOM FINISH UNLESS NOTED OTHERWISE ON PLANS.

17. NOT USED

18. ALL NEW CONSTRUCTION DETAILS SHALL MATCH EXISTING CONDITIONS TO THE GREATEST EXTENT POSSIBLE.
19. TOILETS SHALL HAVE A MAXIMUM OF 1.28 GALLONS PER FLUSH. SHOWER HEAD FLOW SHALL NOT EXCEED 2 GALLONS PER MINUTE.
20. FIRESTOPPING SHALL BE PROVIDED IN THE FOLLOWING LOCATIONS:
    A. CONCEALED SPACES OF STUD WALLS AND PARTITIONS, INCLUDING FURRED SPACES, AT THE CEILING/FLOOR LEVELS AND AT 10 FOOT INTERVALS ALONG THE LENGTH OF THE WALL.
    B. INTERCONNECTIONS BETWEEN CONCEALED VERTICAL AND HORIZONTAL SPACES SUCH AS OCCUR AT SOFFITS, DROP CEILINGS AND COVE CEILINGS.
    C. CONCEALED SPACES BETWEEN STAIR STRINGERS AT THE TOP AND BOTTOM OF THE RUN AND BETWEEN STUDS ALONG AND IN LINE WITH THE RUN OF THE STAIRS. C.B.C. SEC. 718.2.4
21. ALL EXTERIOR OPENINGS TO BE FLASHED IN A MANNER TO MAKE THEM WEATHERPROOF. C.B.C. SEC. 1405.4

FIRE DEPT NOTES

THE PROPOSED SPRINKLER SYSTEM SHALL BE SUBMITTED UNDER A SEPARATE PERMIT

PORTABLE FIRE EXTINGUISHERS RATED 2A10BC SHALL BE LOCATED WITHIN 75 FEET TRAVEL DISTANCE.

SCOPE OF WORK

THE SCOPE OF WORK INCLUDES:

RESIDENTIAL REMODEL & ADDITION

738 SF 2ND FLOOR ADDITION AND 127 1ST FLOOR ADDITION FOR A TOTAL OF 865 SF ALONG WITH A 160 SF BASEMENT

230 SF JUNIOR ACCESSORY DWELLING UNIT PURSUANT TO SBMC 30.185.040

CODE ANALYSIS

APPLICABLE CODES:	Intent to comply with 2019 CALIFORNIA RESIDENTIAL CODE, 2019 CALIFORNIA PLUMBING CODE, 2019 CALIFORNIA MECHANICAL CODE, 2019 CALIFORNIA ELECTRIC CODE, 2019 TITLE 24 CALIFORNIA ADMINISTRATIVE CODE, 2019 CALIFORNIA FIRE CODE, 2019 CALIFORNIA GREEN BUILDING STANDARDS CODE AND 2019 CALIFORNIA ENERGY CODE, ADA TITLE III,and current engineering and architectural practices
MIXED OCCUPANCY?	NO
SPRINKLERS REQUIRED?	YES
OCCUPANCY GROUP:	R-3
ACTUAL HEIGHT IN STORIES OF (E) RESIDENCE:	2
TYPE OF CONSTRUCTION:	VB
MAXIMUM HEIGHT (PER LOCAL ORDINANCE):	45'0"
ACTUAL HEIGHT:	25'7"

SWMP CALCULATIONS

PROPOSED NEW IMPERVIOUS AREA

ROOF	202 SF
STAIR/DECK	57 SF
CONCRETE WALK	69 SF
TOTAL	328 SF

PROPOSED REDEVELOPED IMPERVIOUS AREA

ROOF	1,377 SF
TOTAL	1,377 SF

PROPOSED REMOVED IMPERVIOUS AREA

WALKS/STAIRS/DECK	223 SF
TOTAL	223 SF

TOTAL NEW IMPERVIOUS AREA IS 500 - 1,999 SF AND THUS MUST COMPLY WITH **TIER 2** POST-CONSTRUCTION STORM WATER REQUIREMENTS

FAR CALCULATOR

F.A.R. Calculator

Instructions: Enter the information in the white boxes below. The spreadsheet will calculate the proposed FAR (floor area ratio), the 100% max FAR (per the Zoning Ordinance for "Required FAR"), and the 85% max FAR (per the Zoning Ordinance for "Required FAR"). Additionally it will determine whether a FAR Modification is required. "Guideline FAR" calculations are as outlined in the "Applicability" section of the Single Family Residence Design Guidelines, page 23-C.

The **Net Lot Area** does not include any Public Road Easements or Public Road Right-of-Way areas. The proposed **TOTAL Net FAR Floor Area** shall include the net floor area of all stories of all building, but may or may not include basement/cellar floor area. For further clarification on these definitions please refer to SBMC §28.15.053 & 30.300. This form has not yet been updated for current Title 30 zone designations, see SBMC §30.05.010 for comparison.

ENTER Project Address:	Project Address
Is there a basement or cellar existing or proposed?	Yes
ENTER Proposed TOTAL Net FAR Floor Area (in sq. ft.):	1,886

ENTER Zone ONLY from drop-down list:	OTHER
ENTER Net Lot Area (in sq. ft.):	3,000
Is the height of existing or proposed buildings 17 feet or greater?	Yes
Are existing or proposed buildings two stories or greater?	Yes
The FAR Requirements are:	GUIDELINE**

ENTER Average Slope of Lot:	1.00%
Does the height of existing or proposed buildings exceed 25 feet?	Yes
Is the site in the Hillside Design District?	No
Does the project include 500 or more cu. yds. of grading outside the main building footprint?	No
An FAR MOD is not required per SBMC §28.15 or §30.20.030	

FLOOR AREA RATIO (FAR):	0.629
Lot Size Range:	< 4,000 sq. ft.
MAX FAR Calculation (in sq. ft.):	2,200 sq. ft.
100% MAX FAR:	0.733
100% MAX FAR (in sq. ft.):	2,200
85% of MAX FAR (in sq. ft.):	1,870
80% of MAX FAR (in sq. ft.):	1,760
The 1886 square foot proposed total is 86% of the MAX FAR.*	

* NOTE: Percentage total is rounded up.

**NOTE: If your project is located on a site with multiple or overlay zones, please contact Planning Staff to confirm whether the FAR limitations are "Required" or "Guideline".

Acreage Conversion Calculator	
ENTER Acreage to Convert to square footage:	1.00
Net Lot Area (in sq. ft.):	43560

TABULATIONS

PROPERTY OWNERS:			KIEL & EMILY KELLOW, 310 E. MICHELTORENA, SANTA BARBARA, CA 93101
PROJECT ADDRESS:			310 E. MICHELTORENA, SANTA BARBARA, CA 93101
A.P.N.:			029-021-002
HIGH FIRE ZONE?			NO
FLOOD ZONE?			NO
SLOPE:			8%
LAND USE ZONE:			R-M
SETBACKS: FRONT:		10 FT	
SETBACKS: REAR:		6 FT	
SETBACKS: INTERIOR:		6 FT	
LOT AREA:	GROSS:		3,000 SF, 0.07 ACRES
	NET:		3,000 SF, 0.07 ACRES

BUILDING AREA

EXISTING FLOOR AREA	NET	GROSS
PRIMARY RESIDENCE	1,021	1,094 SF
ATTACHED 2-CAR GARAGE	0	0 SF
ACCESSSORY STRUCTURE	0	0 SF
TOTAL EXISTING FLOOR AREA	1,021	1,094 SF

PROPOSED FLOOR AREA	NET	GROSS
PRIMARY RESIDENCE - 1ST FLOOR	127	132 SF
PRIMARY RESIDENCE - 2ND FLOOR	738	852 SF
ATTACHED 2-CAR GARAGE	0	0 SF
CONVERSION OF (E) STRUCTURE TO ADU	230	253 SF
ADDITION TO ADU	0	0 SF
TOTAL ADU	230	253 SF
TOTAL PROPOSED FLOOR AREA ON SITE	1,886	2,078 SF

PARKING CALCULATION

PRIMARY RESIDENCE PARKING	COVERED	UNCOVERED
EXISTING NON-CONFORMING:	0	1
PROPOSED;	0	0
REQUIRED:	0 PARKING SPACES PER SBMC 30.185.040 FOR THE ADU	

ACCESSORY DWELLING UNIT PARKING	COVERED	UNCOVERED
EXISTING:	N/A	N/A
PROPOSED:	0	0
REQUIRED:	0 PARKING SPACES PER SBMC 30.185.040 FOR THE ADU	

MAXIMUM ACCESSORY BUILDING FLOOR AREA ALLOWED:	1,000 SF
PROPOSED ACCESSORY BUILDING FLOOR AREA:	0 SF

SYMBOLS

- WORK POINT,CONTROL PT. OR DATUM PT.
- INTERIOR ELEVATION(S)
- ELEVATION # / SHEET WHERE DRAWN (4 / A4.1 / 1 2 3)
- WINDOW TYPE (1)
- DOOR TYPE (1)
- REVISION (1)
- PARTITION TYPE (A)
- ROOM NUMBER (Room Name 101)
- REFERENCE NOTE (101)
- SECTION (D / A3.1)
- SECTION IDENTIFICATION / SHEET WHERE DRAWN
- DETAIL REFERENCE (1 / A6.1)
- DETAIL NUMBER / SHEET WHERE DRAWN
- EXIST. CONTOUR (123)
- NEW CONTOUR (123)
- NEW GRADE (123)
- EXISTING GRADE (123)

DRAWING INDEX

G-000	TITLE SHEET
G-001	CALIFORNIA GREEN BUILDING STANDARDS
G-002	CALIFORNIA GREEN BUILDING STANDARDS
G-003	2019 RESIDENTIAL MANDATORY MEASURES
A-100	EXISTING & PROPOSED SITE PLAN
A-101	EXISTING FLOOR PLAN
A-102	PROPOSED FLOOR PLAN
A-103	EXISTING & PROPOSED ROOF PLAN
A-201	EXISTING ELEVATIONS
A-202	PROPOSED ELEVATIONS
A-203	COLORS & FINISHES
A-301	BUILDING SECTIONS
A-501	DOOR & WINDOW DETAILS
A-601	EXTERIOR DETAILS

STRUCTURAL

S-1.1	TITLE SHEET
S-1.2	STRUCTURAL SPECIFICATIONS
S-2.1	FOUNDATION PLAN
S-2.2	FLOOR FRAMING PLAN
S-2.3	ROOF FRAMING PLAN

PROFESSIONALS

OWNER	KIEL & EMILY KELLOW, 310 E. MICHELTORENA, SANTA BARBARA, CA 93101, 805.450.2427
ARCHITECT	ANDRULAITIS+MIXON ARCHITECTS, INC., 2040 ALAMEDA PADRE SERRA, SUITE 107, SANTA BARBARA, CA 93103, 805.899.2528
STRCUTURAL ENGINEER	ASHLEY & VANCE ENGINEERING, INC., 210 EAST COTA STREET, SANTA BARBARA, CA 93101, 805.962.9966

VICINITY MAP

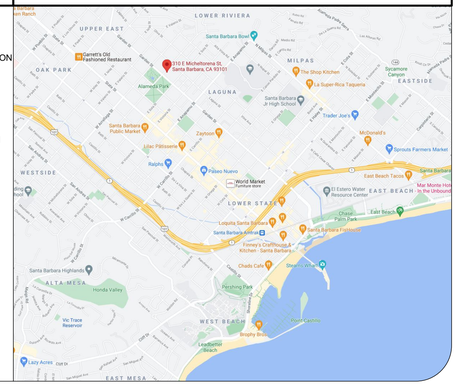

Proposed project/remodel for:
Kellow Addition
310 E. Micheltorena
Santa Barbara, CA 93101

andrulaitis+mixon
2040 ALAMEDA PADRE SERRA SUITE 107
SANTA BARBARA CALIFORNIA 805 899 2528

LICENSE

JOB NUMBER
21.009

CONTENTS
TITLE SHEET

ANDRULAITIS MIXON ARCHITECTS, INC. expressly reserves their common law copyright and other property rights in these plans. These plans are not to be reproduced, changed, or copied in any form or manner whatsoever, nor are they to be assigned to a third party without first obtaining the written permission and consent of Andrulaitis Mixon Architects, Inc. In the event of unauthorized reuse of these plans by a third party, the third party shall hold Andrulaitis Mixon Architects, Inc. harmless.

SUBMITTALS

DATE	TYPE
09.28.21	SFDB
11.29.21	SFDB
01.31.22	SFDB

ISSUE DATE
01.31.22

REVISIONS

NO.	DATE	TYPE

G-000

2019 CALIFORNIA GREEN BUILDING STANDARDS CODE
RESIDENTIAL MANDATORY MEASURES, SHEET 1 (January 2020, Includes August 2019 Supplement)

AIA California

Y = YES
N/A = NOT APPLICABLE
RESPON. PARTY = RESPONSIBLE PARTY (ie: ARCHITECT, ENGINEER, OWNER, CONTRACTOR, INSPECTOR ETC.)

CHAPTER 3
GREEN BUILDING
SECTION 301 GENERAL

301.1 SCOPE. Buildings shall be designed to include the green building measures specified as mandatory in the application checklists contained in this code. Voluntary green building measures are also included in the application checklists and may be included in the design and construction of structures covered by this code, but are not required unless adopted by a city, county, or city and county as specified in Section 101.7.

301.1.1 Additions and alterations. [HCD] The mandatory provisions of Chapter 4 shall be applied to additions or alterations of existing residential buildings where the addition or alteration increases the building's conditioned area, volume, or size. The requirements shall apply only to and/or within the specific area of the addition or alteration.

Note: On and after January 1, 2014, residential buildings undergoing permitted alterations, additions, or improvements shall replace noncompliant plumbing fixtures with water-conserving plumbing fixtures. Plumbing fixture replacement is required prior to issuance of a certificate of final completion, certificate of occupancy or final permit approval by the local building department. See Civil Code Section 1101.1, et seq., for the definition of a noncompliant plumbing fixture, types of residential buildings affected and other important enactment dates.

301.2 LOW-RISE AND HIGH-RISE RESIDENTIAL BUILDINGS. [HCD] The provisions of individual sections of CALGreen may apply to either low-rise residential buildings high-rise residential buildings, or both. Individual sections will be designated by banners to indicate where the section applies specifically to low-rise only (LR) or high-rise only (HR). When the section applies to both low-rise and high-rise buildings, no banner will be used.

SECTION 302 MIXED OCCUPANCY BUILDINGS

302.1 MIXED OCCUPANCY BUILDINGS. In mixed occupancy buildings, each portion of a building shall comply with the specific green building measures applicable to each specific occupancy.

ABBREVIATION DEFINITIONS:

HCD	Department of Housing and Community Development
BSC	California Building Standards Commission
DSA-SS	Division of the State Architect, Structural Safety
OSHPD	Office of Statewide Health Planning and Development
LR	Low Rise
HR	High Rise
AA	Additions and Alterations
N	New

CHAPTER 4
RESIDENTIAL MANDATORY MEASURES
DIVISION 4.1 PLANNING AND DESIGN
SECTION 4.102 DEFINITIONS
4.102.1 DEFINITIONS
The following terms are defined in Chapter 2 *(and are included here for reference)*

FRENCH DRAIN. A trench, hole or other depressed area loosely filled with rock, gravel, fragments of brick or similar pervious material used to collect or channel drainage or runoff water.

WATTLES. Wattles are used to reduce sediment in runoff. Wattles are often constructed of natural plant materials such as hay, straw or similar material shaped in the form of tubes and placed on a downflow slope. Wattles are also used for perimeter and inlet controls.

4.106 SITE DEVELOPMENT
4.106.1 GENERAL. Preservation and use of available natural resources shall be accomplished through evaluation and careful planning to minimize negative effects on the site and adjacent areas. Preservation of slopes, management of storm water drainage and erosion controls shall comply with this section.

4.106.2 STORM WATER DRAINAGE AND RETENTION DURING CONSTRUCTION. Projects which disturb less than one acre of soil and are not part of a larger common plan of development which in total disturbs one acre or more, shall manage storm water drainage during construction. In order to manage storm water drainage during construction, one or more of the following measures shall be implemented to prevent flooding of adjacent property, prevent erosion and retain soil runoff on the site.

1. Retention basins of sufficient size shall be utilized to retain storm water on the site.
2. Where storm water is conveyed to a public drainage system, collection point, gutter or similar disposal method, water shall be filtered by use of a barrier system, wattle or other method approved by the enforcing agency.
3. Compliance with a lawfully enacted storm water management ordinance.

Note: Refer to the State Water Resources Control Board for projects which disturb one acre or more of soil, or are part of a larger common plan of development which in total disturbs one acre or more of soil.

(Website: https://www.waterboards.ca.gov/water_issues/programs/stormwater/construction.html)

4.106.3 GRADING AND PAVING. Construction plans shall indicate how the site grading or drainage system will manage all surface water flows to keep water from entering buildings. Examples of methods to manage surface water include, but are not limited to, the following:

1. Swales
2. Water collection and disposal systems
3. French drains
4. Water retention gardens
5. Other water measures which keep surface water away from buildings and aid in groundwater recharge.

Exception: Additions and alterations not altering the drainage path.

4.106.4 Electric vehicle (EV) charging for new construction. New construction shall comply with Sections 4.106.4.1, 4.106.4.2, or 4.106.4.3 to facilitate future installation and use of EV chargers. Electric vehicle supply equipment (EVSE) shall be installed in accordance with the *California Electrical Code*, Article 625.

Exceptions:
1. On a case-by-case basis, where the local enforcing agency has determined EV charging and infrastructure are not feasible based upon one or more of the following conditions:
   1.1 Where there is no commercial power supply.
   1.2 Where there is evidence substantiating that meeting the requirements will alter the local utility infrastructure design requirements on the utility side of the meter so as to increase the utility side cost to the homeowner or the developer by more than $400.00 per dwelling unit.
2. Accessory Dwelling Units (ADU) and Junior Accessory Dwelling Units (JADU) without additional parking facilities.

4.106.4.1 New one- and two-family dwellings and townhouses with attached private garages. For each dwelling unit, install a listed raceway to accommodate a dedicated 208/240-volt branch circuit. The raceway shall not be less than trade size 1 (nominal 1-inch inside diameter). The raceway shall originate at the main service or subpanel and shall terminate into a listed cabinet, box or other enclosure in close proximity to the proposed location of an EV charger. Raceways are required to be continuous at enclosed, inaccessible or concealed areas and spaces. The service panel and/or subpanel shall provide capacity to install a 40-ampere minimum dedicated branch circuit and space(s) reserved to permit installation of a branch circuit overcurrent protective device.

4.106.4.1.1 Identification. The service panel or subpanel circuit directory shall identify the overcurrent protective device space(s) reserved for future EV charging as "EV CAPABLE". The raceway termination location shall be permanently and visibly marked as "EV CAPABLE".

4.106.4.2 New multifamily dwellings. If residential parking is available, ten (10) percent of the total number of parking spaces on a building site, provided for all types of parking facilities, shall be electric vehicle charging spaces (EV spaces) capable of supporting future EVSE. Calculations for the required number of EV spaces shall be rounded up to the nearest whole number.

Notes:
1. Construction documents are intended to demonstrate the project's capability and capacity for facilitating future EV charging.
2. There is no requirement for EV spaces to be constructed or available until EV chargers are installed for use.

4.106.4.2.1 Electric vehicle charging space (EV space) locations. Construction documents shall indicate the location of proposed EV spaces. Where common use parking is provided at least one EV space shall be located in the common use parking area and shall be available for use by all residents.

4.106.4.2.1.1 Electric Vehicle Charging Stations (EVCS) When EV chargers are installed, EV spaces required by Section 4.106.2.2, Item 3, shall comply with at least one of the following options:

1. The EV space shall be located adjacent to an accessible parking space meeting the requirements of the *California Building Code,* Chapter 11A, to allow use of the EV charger from the accessible parking space.
2. The EV space shall be located on an accessible route, as defined in the *California Building Code,* Chapter 2, to the building.

Exception: Electric vehicle charging stations designed and constructed in compliance with the *California Building Code*, Chapter 11B, are not required to comply with Section 4.106.4.2.1.1 and Section 4.106.4.2.2, Item 3.

Note: Electric Vehicle charging stations serving public housing are required to comply with the *California Building Code,* Chapter 11B.

4.106.4.2.2 Electric vehicle charging space (EV space) dimensions. The EV space shall be designed to comply with the following:

1. The minimum length of each EV space shall be 18 feet (5486 mm).
2. The minimum width of each EV space shall be 9 feet (2743 mm).
3. One in every 25 EV spaces, but not less than one EV space, shall have an 8-foot (2438 mm) wide minimum aisle. A 5-foot (1524 mm) wide minimum aisle shall be permitted provided the minimum width of the EV space is 12 feet (3658 mm).
   a. Surface slope for this EV space and the aisle shall not exceed 1 unit vertical in 48 units horizontal (2.083 percent slope) in any direction.

4.106.4.2.3 Single EV space required. Install a listed raceway capable of accommodating a 208/240-volt dedicated branch circuit. The raceway shall not be less than trade size 1 (nominal 1-inch inside diameter). The raceway shall originate at the main service or subpanel and shall terminate into a listed cabinet, box or enclosure in close proximity to the proposed location of the EV space. Construction documents shall identify the raceway termination point. The service panel and/or subpanel shall provide capacity to install a 40-ampere minimum dedicated branch circuit and space(s) reserved to permit installation of a branch circuit overcurrent protective device.

4.106.4.2.4 Multiple EV spaces required. Construction documents shall indicate the raceway termination point and proposed location of future EV spaces and EV chargers. Construction documents shall also provide information on amperage of future EVSE, raceway method(s), wiring schematics and electrical load calculations to verify that the electrical panel service capacity and electrical system, including any on-site distribution transformer(s), have sufficient capacity to simultaneously charge all EVs at all required EV spaces at the full rated amperage of the EVSE. Plan design shall be based upon a 40-ampere minimum branch circuit. Required raceways and related components that are planned to be installed underground, enclosed, inaccessible or in concealed areas and spaces shall be installed at the time of original construction.

4.106.4.2.5 Identification. The service panel or subpanel circuit directory shall identify the overcurrent protective device space(s) reserved for future EV charging purposes as "EV CAPABLE" in accordance with the *California Electrical Code.*

4.106.4.3 New hotels and motels. All newly constructed hotels and motels shall provide EV spaces capable of supporting future installation of EVSE. The construction documents shall identify the location of the EV spaces.

Notes:

1. Construction documents are intended to demonstrate the project's capability and capacity or facilitating future EV charging.
2. There is no requirement for EV spaces to be constructed or available until EV chargers are installed for use.

4.106.4.3.1 Number of required EV spaces. The number of required EV spaces shall be based on the total number of parking spaces provided for all types of parking facilities in accordance with Table 4.106.4.3.1. Calculations for the required number of EV spaces shall be rounded up to the nearest whole number.

TABLE 4.106.4.3.1

TOTAL NUMBER OF PARKING SPACES	NUMBER OF REQUIRED EV SPACES
0-9	0
10-25	1
26-50	2
51-75	4
76-100	5
101-150	7
151-200	10
201 and over	6 percent of total

4.106.4.3.2 Electric vehicle charging space (EV space) dimensions. The EV spaces shall be designed to comply with the following:

1. The minimum length of each EV space shall be 18 feet (5486mm).
2. The minimum width of each EV space shall be 9 feet (2743mm)

4.106.4.3.3 Single EV space required. When a single EV space is required, the EV space shall be designed in accordance with Section 4.106.4.2.3.

4.106.4.3.4 Multiple EV spaces required. When multiple EV spaces are required, the EV spaces shall be designed in accordance with Section 4.106.4.2.4.

4.106.4.3.5 Identification. The service panels or sub-panels shall be identified in accordance with Section 4.106.4.2.5.

4.106.4.3.6 Accessible EV spaces. In addition to the requirements in Section 4.106.4.3, EV spaces for hotels/motels and all EVSE, when installed, shall comply with the accessibility provisions for the EV charging stations in the *California Building Code*, Chapter 11B.

DIVISION 4.2 ENERGY EFFICIENCY
4.201 GENERAL
4.201.1 SCOPE. For the purposes of mandatory energy efficiency standards in this code, the California Energy Commission will continue to adopt mandatory standards.

DIVISION 4.3 WATER EFFICIENCY AND CONSERVATION
4.303 INDOOR WATER USE
4.303.1 WATER CONSERVING PLUMBING FIXTURES AND FITTINGS. Plumbing fixtures (water closets and urinals) and fittings (faucets and showerheads) shall comply with the sections 4.303.1.1, 4.303.1.2, 4.303.1.3, and 4.303.4.4.

Note: All noncompliant plumbing fixtures in any residential real property shall be replaced with water-conserving plumbing fixtures. Plumbing fixture replacement is required prior to issuance of a certificate of final completion, certificate of occupancy, or final permit approval by the local building department. See Civil Code Section 1101.1, et seq., for the definition of a noncompliant plumbing fixture, types of residential buildings affected and other important enactment dates.

4.303.1.1 Water Closets. The effective flush volume of all water closets shall not exceed 1.28 gallons per flush. Tank-type water closets shall be certified to the performance criteria of the U.S. EPA WaterSense Specification for Tank-type Toilets.

Note: The effective flush volume of dual flush toilets is defined as the composite, average flush volume of two reduced flushes and one full flush.

4.303.1.2 Urinals. The effective flush volume of wall mounted urinals shall not exceed 0.125 gallons per flush. The effective flush volume of all other urinals shall not exceed 0.5 gallons per flush.

4.303.1.3 Showerheads.

4.303.1.3.1 Single Showerhead. Showerheads shall have a maximum flow rate of not more than 1.8 gallons per minute at 80 psi. Showerheads shall be certified to the performance criteria of the U.S. EPA WaterSense Specification for Showerheads.

4.303.1.3.2 Multiple showerheads serving one shower. When a shower is served by more than one showerhead, the combined flow rate of all the showerheads and/or other shower outlets controlled by a single valve shall not exceed 1.8 gallons per minute at 80 psi, or the shower shall be designed to only allow one shower outlet to be in operation at a time.

Note: A hand-held shower shall be considered a showerhead.

4.303.1.4 Faucets.

4.303.1.4.1 Residential Lavatory Faucets. The maximum flow rate of residential lavatory faucets shall not exceed 1.2 gallons per minute at 60 psi. The minimum flow rate of residential lavatory faucets shall not be less than 0.8 gallons per minute at 20 psi.

4.303.1.4.2 Lavatory Faucets in Common and Public Use Areas. The maximum flow rate of lavatory faucets installed in common and public use areas (outside of dwellings or sleeping units) in residential buildings shall not exceed 0.5 gallons per minute at 60 psi.

4.303.1.4.3 Metering Faucets. Metering faucets when installed in residential buildings shall not deliver more than 0.2 gallons per cycle.

4.303.1.4.4 Kitchen Faucets. The maximum flow rate of kitchen faucets shall not exceed 1.8 gallons per minute at 60 psi. Kitchen faucets may temporarily increase the flow above the maximum rate, but not to exceed 2.2 gallons per minute at 60 psi, and must default to a maximum flow rate of 1.8 gallons per minute at 60 psi.

Note: Where complying faucets are unavailable, aerators or other means may be used to achieve reduction.

4.303.2 STANDARDS FOR PLUMBING FIXTURES AND FITTINGS. Plumbing fixtures and fittings shall be installed in accordance with the *California Plumbing Code*, and shall meet the applicable standards referenced in Table 1701.1 of the *California Plumbing Code*.

NOTE:
THIS TABLE COMPILES THE DATA IN SECTION 4.303.1, AND
IS INCLUDED AS A CONVENIENCE FOR THE USER.

TABLE - MAXIMUM FIXTURE WATER USE

FIXTURE TYPE	FLOW RATE
SHOWER HEADS (RESIDENTIAL)	1.8 GMP @ 80 PSI
LAVATORY FAUCETS (RESIDENTIAL)	MAX. 1.2 GPM @ 60 PSI MIN. 0.8 GPM @ 20 PSI
LAVATORY FAUCETS IN COMMON & PUBLIC USE AREAS	0.5 GPM @ 60 PSI
KITCHEN FAUCETS	1.8 GPM @ 60 PSI
METERING FAUCETS	0.2 GAL/CYCLE
WATER CLOSET	1.28 GAL/FLUSH
URINALS	0.125 GAL/FLUSH

4.304 OUTDOOR WATER USE
4.304.1 OUTDOOR POTABLE WATER USE IN LANDSCAPE AREAS. Residential developments shall comply with a local water efficient landscape ordinance or the current California Department of Water Resources' Model Water Efficient Landscape Ordinance (MWELO), whichever is more stringent.

NOTES:

1. The Model Water Efficient Landscape Ordinance (MWELO) is located in the *California Code Regulations*, Title 23, Chapter 2.7, Division 2. MWELO and supporting documents, including water budget calculator, are available at: https://www.water.ca.gov/

DIVISION 4.4 MATERIAL CONSERVATION AND RESOURCE EFFICIENCY
4.406 ENHANCED DURABILITY AND REDUCED MAINTENANCE
4.406.1 RODENT PROOFING. Annular spaces around pipes, electric cables, conduits or other openings in sole/bottom plates at exterior walls shall be protected against the passage of rodents by closing such openings with cement mortar, concrete masonry or a similar method acceptable to the enforcing agency.

4.408 CONSTRUCTION WASTE REDUCTION, DISPOSAL AND RECYCLING
4.408.1 CONSTRUCTION WASTE MANAGEMENT. Recycle and/or salvage for reuse a minimum of 65 percent of the non-hazardous construction and demolition waste in accordance with either Section 4.408.2, 4.408.3 or 4.408.4, or meet a more stringent local construction and demolition waste management ordinance.

Exceptions:

1. Excavated soil and land-clearing debris.
2. Alternate waste reduction methods developed by working with local agencies if diversion or recycle facilities capable of compliance with this item do not exist or are not located reasonably close to the jobsite.
3. The enforcing agency may make exceptions to the requirements of this section when isolated jobsites are located in areas beyond the haul boundaries of the diversion facility.

4.408.2 CONSTRUCTION WASTE MANAGEMENT PLAN. Submit a construction waste management plan in conformance with Items 1 through 5. The construction waste management plan shall be updated as necessary and shall be available during construction for examination by the enforcing agency.

1. Identify the construction and demolition waste materials to be diverted from disposal by recycling, reuse on the project or salvage for future use or sale.
2. Specify if construction and demolition waste materials will be sorted on-site (source separated) or bulk mixed (single stream).
3. Identify diversion facilities where the construction and demolition waste material collected will be taken.
4. Identify construction methods employed to reduce the amount of construction and demolition waste generated.
5. Specify that the amount of construction and demolition waste materials diverted shall be calculated by weight or volume, but not by both.

4.408.3 WASTE MANAGEMENT COMPANY. Utilize a waste management company, approved by the enforcing agency, which can provide verifiable documentation that the percentage of construction and demolition waste material diverted from the landfill complies with Section 4.408.1.

Note: The owner or contractor may make the determination if the construction and demolition waste materials will be diverted by a waste management company.

4.408.4 WASTE STREAM REDUCTION ALTERNATIVE [LR]. Projects that generate a total combined weight of construction and demolition waste disposed of in landfills, which do not exceed 3.4 lbs./sq.ft. of the building area shall meet the minimum 65% construction waste reduction requirement in Section 4.408.1

4.408.4.1 WASTE STREAM REDUCTION ALTERNATIVE. Projects that generate a total combined weight of construction and demolition waste disposed of in landfills, which do not exceed 2 pounds per square foot of the building area, shall meet the minimum 65% construction waste reduction requirement in Section 4.408.1

4.408.5 DOCUMENTATION. Documentation shall be provided to the enforcing agency which demonstrates compliance with Section 4.408.2, items 1 through 5, Section 4.408.3 or Section 4.408.4..

Notes:

1. Sample forms found in "A Guide to the California Green Building Standards Code (Residential)" located at www.hcd.ca.gov/CALGreen.html may be used to assist in documenting compliance with this section.
2. Mixed construction and demolition debris (C & D) processors can be located at the California Department of Resources Recycling and Recovery (CalRecycle).

4.410 BUILDING MAINTENANCE AND OPERATION
4.410.1 OPERATION AND MAINTENANCE MANUAL. At the time of final inspection, a manual, compact disc, web-based reference or other media acceptable to the enforcing agency which includes all of the following shall be placed in the building:

1. Directions to the owner or occupant that the manual shall remain with the building throughout the life cycle of the structure.
2. Operation and maintenance instructions for the following:
   a. Equipment and appliances, including water-saving devices and systems, HVAC systems, photovoltaic systems, electric vehicle chargers, water-heating systems and other major appliances and equipment.
   b. Roof and yard drainage, including gutters and downspouts.
   c. Space conditioning systems, including condensers and air filters.
   d. Landscape irrigation systems.
   e. Water reuse systems.
3. Information from local utility, water and waste recovery providers on methods to further reduce resource consumption, including recycle programs and locations.
4. Public transportation and/or carpool options available in the area.
5. Educational material on the positive impacts of an interior relative humidity between 30-60 percent and what methods an occupant may use to maintain the relative humidity level in that range.
6. Information about water-conserving landscape and irrigation design and controllers which conserve water.
7. Instructions for maintaining gutters and downspouts and the importance of diverting water at least 5 feet away from the foundation.
8. Information on required routine maintenance measures, including, but not limited to, caulking, painting, grading around the building, etc.
9. Information about state solar energy and incentive programs available.
10. A copy of all special inspections verifications required by the enforcing agency or this code.

4.410.2 RECYCLING BY OCCUPANTS. Where 5 or more multifamily dwelling units are constructed on a building site, provide readily accessible area(s) that serves all buildings on the site and are identified for the depositing, storage and collection of non-hazardous materials for recycling, including (at a minimum) paper, corrugated cardboard, glass, plastics, organic waster, and metals, or meet a lawfully enacted local recycling ordinance, if more restrictive.

Exception: Rural jurisdictions that meet and apply for the exemption in Public Resources Code Section 42649.82 (a)(2)(A) et seq. are note required to comply with the organic waste portion of this section.

DIVISION 4.5 ENVIRONMENTAL QUALITY
SECTION 4.501 GENERAL
4.501.1 Scope
The provisions of this chapter shall outline means of reducing the quality of air contaminants that are odorous, irritating and/or harmful to the comfort and well being of a building's installers, occupants and neighbors.

SECTION 4.502 DEFINITIONS
5.102.1 DEFINITIONS
The following terms are defined in Chapter 2 *(and are included here for reference)*

AGRIFIBER PRODUCTS. Agrifiber products include wheatboard, strawboard, panel substrates and door cores, not including furniture, fixtures and equipment (FF&E) not considered base building elements.

COMPOSITE WOOD PRODUCTS. Composite wood products include hardwood plywood, particleboard and medium density fiberboard. "Composite wood products" does not include hardboard, structural plywood, structural panels, structural composite lumber, oriented strand board, glued laminated timber, prefabricated wood I-joists or finger-jointed lumber, all as specified in California Code of regulations (CCR), title 17, Section 93120.1.

DIRECT-VENT APPLIANCE. A fuel-burning appliance with a sealed combustion system that draws all air for combustion from the outside atmosphere and discharges all flue gases to the outside atmosphere.

DISCLAIMER: *THIS DOCUMENT IS PROVIDED AND INTENDED TO BE USED AS A MEANS TO INDICATE AREAS OF COMPLIANCE WITH THE CALIFORNIA GREEN BUILDING STANDARDS (CALGREEN) CODE. DUE TO THE VARIABLES BETWEEN BUILDING DEPARTMENT JURISDICTIONS, THIS CHECKLIST IS TO BE USED ON AN INDIVIDUAL PROJECT BASIS AND MAY BE MODIFIED BY THE END USER TO MEET THOSE INDIVIDUAL NEEDS. THE END USER ASSUMES ALL RESPONSIBILITY ASSOCIATED WITH THE USE OF THIS DOCUMENT, INCLUDING VERIFICATION WITH THE FULL CODE.*

andrulaitis+mixon
2040 ALAMEDA PADRE SERRA
SANTA BARBARA SUITE 107
CALIFORNIA 805 899 2528

Proposed project/remodel for:
Kellow Addition
310 E. Micheltorena
Santa Barbara, CA 93101

LICENSE

JOB NUMBER
21.009

CONTENTS
2019 CAL GREEN STANDARDS

ANDRULAITIS MIXON ARCHITECTS, INC. expressly reserves their common law copyright and other property rights in these plans. These plans are not to be reproduced, changed, or copied in any form or manner whatsoever, nor are they to be assigned to a third party without first obtaining the written permission and consent of Andrulaitis Mixon Architects, Inc. In the event of unauthorized reuse of these plans by a third party, the third party shall hold Andrulaitis Mixon Architects, Inc. harmless.

SUBMITTALS

DATE	TYPE
09.28.21	SFDB
11.29.21	SFDB
01.31.22	SFDB

ISSUE DATE
01.31.22

REVISIONS

NO.	DATE	TYPE

G-001

2019 CALIFORNIA GREEN BUILDING STANDARDS CODE
RESIDENTIAL MANDATORY MEASURES, SHEET 1 (January 2020, Includes August 2019 Supplement)

AIA California

Y = YES
N/A = NOT APPLICABLE
RESPON. PARTY = RESPONSIBLE PARTY (ie: ARCHITECT, ENGINEER, OWNER, CONTRACTOR, INSPECTOR ETC.)

MAXIMUM INCREMENTAL REACTIVITY (MIR). The maximum change in weight of ozone formed by adding a compound to the "Base Reactive Organic Gas (ROG) Mixture" per weight of compound added, expressed to hundredths of a gram (g O³/g ROC).
Note: MIR values for individual compounds and hydrocarbon solvents are specified in CCR, Title 17, Sections 94700 and 94701.

MOISTURE CONTENT. The weight of the water in wood expressed in percentage of the weight of the oven-dry wood.

PRODUCT-WEIGHTED MIR (PWMIR). The sum of all weighted-MIR for all ingredients in a product subject to this article. The PWMIR is the total product reactivity expressed to hundredths of a gram of ozone formed per gram of product (excluding container and packaging).
Note: PWMIR is calculated according to equations found in CCR, Title 17, Section 94521 (a).

REACTIVE ORGANIC COMPOUND (ROC). Any compound that has the potential, once emitted, to contribute to ozone formation in the troposphere.

VOC. A volatile organic compound (VOC) broadly defined as a chemical compound based on carbon chains or rings with vapor pressures greater than 0.1 millimeters of mercury at room temperature. These compounds typically contain hydrogen and may contain oxygen, nitrogen and other elements. See CCR Title 17, Section 94508(a).

4.503 FIREPLACES

4.503.1 GENERAL. Any installed gas fireplace shall be a direct-vent sealed-combustion type. Any installed woodstove or pellet stove shall comply with U.S. EPA New Source Performance Standards (NSPS) emission limits as applicable, and shall have a permanent label indicating they are certified to meet the emission limits. Woodstoves, pellet stoves and fireplaces shall also comply with applicable local ordinances.

4.504 POLLUTANT CONTROL

4.504.1 COVERING OF DUCT OPENINGS & PROTECTION OF MECHANICAL EQUIPMENT DURING CONSTRUCTION. At the time of rough installation, during storage on the construction site and until final startup of the heating, cooling and ventilating equipment, all duct and other related air distribution component openings shall be covered with tape, plastic, sheet metal or other methods acceptable to the enforcing agency to reduce the amount of water, dust or debris which may enter the system.

4.504.2 FINISH MATERIAL POLLUTANT CONTROL. Finish materials shall comply with this section.

4.504.2.1 Adhesives, Sealants and Caulks. Adhesives, sealant and caulks used on the project shall meet the requirements of the following standards unless more stringent local or regional air pollution or air quality management district rules apply:

1. Adhesives, adhesive bonding primers, adhesive primers, sealants, sealant primers and caulks shall comply with local or regional air pollution control or air quality management district rules where applicable or SCAQMD Rule 1168 VOC limits, as shown in Table 4.504.1 or 4.504.2, as applicable. Such products also shall comply with the Rule 1168 prohibition on the use of certain toxic compounds (chloroform, ethylene dichloride, methylene chloride, perchloroethylene and tricloroethylene), except for aerosol products, as specified in Subsection 2 below.
2. Aerosol adhesives, and smaller unit sizes of adhesives, and sealant or caulking compounds (in units of product, less packaging, which do not weigh more than 1 pound and do not consist of more than 16 fluid ounces) shall comply with statewide VOC standards and other requirements, including prohibitions on use of certain toxic compounds, of *California Code of Regulations*, Title 17, commencing with section 94507.

4.504.2.2 Paints and Coatings. Architectural paints and coatings shall comply with VOC limits in Table 1 of the ARB Architectural Suggested Control Measure, as shown in Table 4.504.3, unless more stringent local limits apply. The VOC content limit for coatings that do not meet the definitions for the specialty coatings categories listed in Table 4.504.3 shall be determined by classifying the coating as a Flat, Nonflat or Nonflat-High Gloss coating, based on its gloss, as defined in subsections 4.21, 4.36, and 4.37 of the 2007 California Air Resources Board, Suggested Control Measure, and the corresponding Flat, Nonflat or Nonflat-High Gloss VOC limit in Table 4.504.3 shall apply.

4.504.2.3 Aerosol Paints and Coatings. Aerosol paints and coatings shall meet the Product-weighted MIR Limits for ROC in Section 94522(a)(2) and other requirements, including prohibitions on use of certain toxic compounds and ozone depleting substances, in Sections 94522(e)(1) and (f)(1) of *California Code of Regulations*, Title 17, commencing with Section 94520; and in areas under the jurisdiction of the Bay Area Air Quality Management District additionally comply with the percent VOC by weight of product limits of Regulation 8, Rule 49.

4.504.2.4 Verification. Verification of compliance with this section shall be provided at the request of the enforcing agency. Documentation may include, but is not limited to, the following:

1. Manufacturer's product specification.
2. Field verification of on-site product containers.

TABLE 4.504.1 - ADHESIVE VOC LIMIT[1,2]
(Less Water and Less Exempt Compounds in Grams per Liter)

ARCHITECTURAL APPLICATIONS	VOC LIMIT
INDOOR CARPET ADHESIVES	50
CARPET PAD ADHESIVES	50
OUTDOOR CARPET ADHESIVES	150
WOOD FLOORING ADHESIVES	100
RUBBER FLOOR ADHESIVES	60
SUBFLOOR ADHESIVES	50
CERAMIC TILE ADHESIVES	65
VCT & ASPHALT TILE ADHESIVES	50
DRYWALL & PANEL ADHESIVES	50
COVE BASE ADHESIVES	50
MULTIPURPOSE CONSTRUCTION ADHESIVE	70
STRUCTURAL GLAZING ADHESIVES	100
SINGLE-PLY ROOF MEMBRANE ADHESIVES	250
OTHER ADHESIVES NOT LISTED	50
SPECIALTY APPLICATIONS	
PVC WELDING	510
CPVC WELDING	490
ABS WELDING	325
PLASTIC CEMENT WELDING	250
ADHESIVE PRIMER FOR PLASTIC	550
CONTACT ADHESIVE	80
SPECIAL PURPOSE CONTACT ADHESIVE	250
STRUCTURAL WOOD MEMBER ADHESIVE	140
TOP & TRIM ADHESIVE	250
SUBSTRATE SPECIFIC APPLICATIONS	
METAL TO METAL	30
PLASTIC FOAMS	50
POROUS MATERIAL (EXCEPT WOOD)	50
WOOD	30
FIBERGLASS	80

1. IF AN ADHESIVE IS USED TO BOND DISSIMILAR SUBSTRATES TOGETHER, THE ADHESIVE WITH THE HIGHEST VOC CONTENT SHALL BE ALLOWED.

2. FOR ADDITIONAL INFORMATION REGARDING METHODS TO MEASURE THE VOC CONTENT SPECIFIED IN THIS TABLE, SEE SOUTH COAST AIR QUALITY MANAGEMENT DISTRICT RULE 1168.

TABLE 4.504.2 - SEALANT VOC LIMIT
(Less Water and Less Exempt Compounds in Grams per Liter)

SEALANTS	VOC LIMIT
ARCHITECTURAL	250
MARINE DECK	760
NONMEMBRANE ROOF	300
ROADWAY	250
SINGLE-PLY ROOF MEMBRANE	450
OTHER	420
SEALANT PRIMERS	
ARCHITECTURAL	
NON-POROUS	250
POROUS	775
MODIFIED BITUMINOUS	500
MARINE DECK	760
OTHER	750

TABLE 4.504.3 - VOC CONTENT LIMITS FOR ARCHITECTURAL COATINGS[2,3]
GRAMS OF VOC PER LITER OF COATING, LESS WATER & LESS EXEMPT COMPOUNDS

COATING CATEGORY	VOC LIMIT
FLAT COATINGS	50
NON-FLAT COATINGS	100
NONFLAT-HIGH GLOSS COATINGS	150
SPECIALTY COATINGS	
ALUMINUM ROOF COATINGS	400
BASEMENT SPECIALTY COATINGS	400
BITUMINOUS ROOF COATINGS	50
BITUMINOUS ROOF PRIMERS	350
BOND BREAKERS	350
CONCRETE CURING COMPOUNDS	350
CONCRETE/MASONRY SEALERS	100
DRIVEWAY SEALERS	50
DRY FOG COATINGS	150
FAUX FINISHING COATINGS	350
FIRE RESISTIVE COATINGS	350
FLOOR COATINGS	100
FORM-RELEASE COMPOUNDS	250
GRAPHIC ARTS COATINGS (SIGN PAINTS)	500
HIGH TEMPERATURE COATINGS	420
INDUSTRIAL MAINTENANCE COATINGS	250
LOW SOLIDS COATINGS[1]	120
MAGNESITE CEMENT COATINGS	450
MASTIC TEXTURE COATINGS	100
METALLIC PIGMENTED COATINGS	500
MULTICOLOR COATINGS	250
PRETREATMENT WASH PRIMERS	420
PRIMERS, SEALERS, & UNDERCOATERS	100
REACTIVE PENETRATING SEALERS	350
RECYCLED COATINGS	250
ROOF COATINGS	50
RUST PREVENTATIVE COATINGS	250
SHELLACS	
CLEAR	730
OPAQUE	550
SPECIALTY PRIMERS, SEALERS & UNDERCOATERS	100
STAINS	250
STONE CONSOLIDANTS	450
SWIMMING POOL COATINGS	340
TRAFFIC MARKING COATINGS	100
TUB & TILE REFINISH COATINGS	420
WATERPROOFING MEMBRANES	250
WOOD COATINGS	275
WOOD PRESERVATIVES	350
ZINC-RICH PRIMERS	340

1. GRAMS OF VOC PER LITER OF COATING, INCLUDING WATER & EXEMPT COMPOUNDS

2. THE SPECIFIED LIMITS REMAIN IN EFFECT UNLESS REVISED LIMITS ARE LISTED IN SUBSEQUENT COLUMNS IN THE TABLE.

3. VALUES IN THIS TABLE ARE DERIVED FROM THOSE SPECIFIED BY THE CALIFORNIA AIR RESOURCES BOARD, ARCHITECTURAL COATINGS SUGGESTED CONTROL MEASURE, FEB. 1, 2008. MORE INFORMATION IS AVAILABLE FROM THE AIR RESOURCES BOARD.

TABLE 4.504.5 - FORMALDEHYDE LIMITS[1]
MAXIMUM FORMALDEHYDE EMISSIONS IN PARTS PER MILLION

PRODUCT	CURRENT LIMIT
HARDWOOD PLYWOOD VENEER CORE	0.05
HARDWOOD PLYWOOD COMPOSITE CORE	0.05
PARTICLE BOARD	0.09
MEDIUM DENSITY FIBERBOARD	0.11
THIN MEDIUM DENSITY FIBERBOARD[2]	0.13

1. VALUES IN THIS TABLE ARE DERIVED FROM THOSE SPECIFIED BY THE CALIF. AIR RESOURCES BOARD, AIR TOXICS CONTROL MEASURE FOR COMPOSITE WOOD AS TESTED IN ACCORDANCE WITH ASTM E 1333. FOR ADDITIONAL INFORMATION, SEE CALIF. CODE OF REGULATIONS, TITLE 17, SECTIONS 93120 THROUGH 93120.12.

2. THIN MEDIUM DENSITY FIBERBOARD HAS A MAXIMUM THICKNESS OF 5/16" (8 MM).

DIVISION 4.5 ENVIRONMENTAL QUALITY (continued)

4.504.3 CARPET SYSTEMS. All carpet installed in the building interior shall meet the testing and product requirements of at least one of the following:

1. Carpet and Rug Institute's Green Label Plus Program.
2. California Department of Public Health, "Standard Method for the Testing and Evaluation of Volatile Organic Chemical Emissions from Indoor Sources Using Environmental Chambers" Version 1.1, February 2010 (also known as Specification 01350).
3. NSF/ANSI 140 at the Gold level.
4. Scientific Certifications Systems Indoor Advantage™ Gold.

4.504.3.1 Carpet cushion. All carpet cushion installed in the building interior shall meet the requirements of the Carpet and Rug Institute's Green Label program.

4.504.3.2 Carpet adhesive. All carpet adhesive shall meet the requirements of Table 4.504.1.

4.504.4 RESILIENT FLOORING SYSTEMS. Where resilient flooring is installed , at least 80% of floor area receiving resilient flooring shall comply with one or more of the following:

1. Products compliant with the California Department of Public Health, "Standard Method for the Testing and Evaluation of Volatile Organic Chemical Emissions from Indoor Sources Using Environmental Chambers," Version 1.1, February 2010 (also known as Specification 01350), certified as a CHPS Low-Emitting Material in the Collaborative for High Performance Schools (CHPS) High Performance Products Database.
2. Products certified under UL GREENGUARD Gold (formerly the Greenguard Children & Schools program).
3. Certification under the Resilient Floor Covering Institute (RFCI) FloorScore program.
4. Meet the California Department of Public Health, "Standard Method for the Testing and Evaluation of Volatile Organic Chemical Emissions from Indoor Sources Using Environmental Chambers", Version 1.1, February 2010 (also known as Specification 01350).

4.504.5 COMPOSITE WOOD PRODUCTS. Hardwood plywood, particleboard and medium density fiberboard composite wood products used on the interior or exterior of the buildings shall meet the requirements for formaldehyde as specified in ARB's Air Toxics Control Measure for Composite Wood (17 CCR 93120 et seq.), by or before the dates specified in those sections, as shown in Table 4.504.5

4.504.5.1 Documentation. Verification of compliance with this section shall be provided as requested by the enforcing agency. Documentation shall include at least one of the following:

1. Product certifications and specifications.
2. Chain of custody certifications.
3. Product labeled and invoiced as meeting the Composite Wood Products regulation (see CCR, Title 17, Section 93120, et seq.).
4. Exterior grade products marked as meeting the PS-1 or PS-2 standards of the Engineered Wood Association, the Australian AS/NZS 2269, European 636 3S standards, and Canadian CSA 0121, CSA 0151, CSA 0153 and CSA 0325 standards.
5. Other methods acceptable to the enforcing agency.

4.505 INTERIOR MOISTURE CONTROL

4.505.1 General. Buildings shall meet or exceed the provisions of the *California Building Standards Code*.

4.505.2 CONCRETE SLAB FOUNDATIONS. Concrete slab foundations required to have a vapor retarder by California Building Code, Chapter 19, or concrete slab-on-ground floors required to have a vapor retarder by the California Residential Code, Chapter 5, shall also comply with this section.

4.505.2.1 Capillary break. A capillary break shall be installed in compliance with at least one of the following:

1. A 4-inch (101.6 mm) thick base of 1/2 inch (12.7mm) or larger clean aggregate shall be provided with a vapor barrier in direct contact with concrete and a concrete mix design, which will address bleeding, shrinkage, and curling, shall be used. For additional information, see American Concrete Institute, ACI 302.2R-06.
2. Other equivalent methods approved by the enforcing agency.
3. A slab design specified by a licensed design professional.

4.505.3 MOISTURE CONTENT OF BUILDING MATERIALS. Building materials with visible signs of water damage shall not be installed. Wall and floor framing shall not be enclosed when the framing members exceed 19 percent moisture content. Moisture content shall be verified in compliance with the following:

1. Moisture content shall be determined with either a probe-type or contact-type moisture meter.Equivalent moisture verification methods may be approved by the enforcing agency and shall satisfy requirements found in Section 101.8 of this code.
2. Moisture readings shall be taken at a point 2 feet (610 mm) to 4 feet (1219 mm) from the grade stamped end of each piece verified.
3. At least three random moisture readings shall be performed on wall and floor framing with documentation acceptable to the enforcing agency provided at the time of approval to enclose the wall and floor framing.

Insulation products which are visibly wet or have a high moisture content shall be replaced or allowed to dry prior to enclosure in wall or floor cavities. Wet-applied insulation products shall follow the manufacturers' drying recommendations prior to enclosure.

4.506 INDOOR AIR QUALITY AND EXHAUST

4.506.1 Bathroom exhaust fans. Each bathroom shall be mechanically ventilated and shall comply with the following:

1. Fans shall be ENERGY STAR compliant and be ducted to terminate outside the building.
2. Unless functioning as a component of a whole house ventilation system, fans must be controlled by a humidity control.
   a. Humidity controls shall be capable of adjustment between a relative humidity range less than or equal to 50% to a maximum of 80%. A humidity control may utilize manual or automatic means of adjustment.
   b. A humidity control may be a separate component to the exhaust fan and is not required to be integral (i.e., built-in)

Notes:

1. For the purposes of this section, a bathroom is a room which contains a bathtub, shower or tub/shower combination.
2. Lighting integral to bathroom exhaust fans shall comply with the *California Energy Code.*

4.507 ENVIRONMENTAL COMFORT

4.507.2 HEATING AND AIR-CONDITIONING SYSTEM DESIGN. Heating and air conditioning systems shall be sized, designed and have their equipment selected using the following methods:

1. The heat loss and heat gain is established according to ANSI/ACCA 2 Manual J - 2011 (Residential Load Calculation), ASHRAE handbooks or other equivalent design software or methods.
2. Duct systems are sized according to ANSI/ACCA 1 Manual D - 2014 (Residential Duct Systems), ASHRAE handbooks or other equivalent design software or methods.
3. Select heating and cooling equipment according to ANSI/ACCA 3 Manual S - 2014 (Residential Equipment Selection), or other equivalent design software or methods.

Exception: Use of alternate design temperatures necessary to ensure the system functions are acceptable.

CHAPTER 7
INSTALLER & SPECIAL INSPECTOR QUALIFICATIONS

702 QUALIFICATIONS

702.1 INSTALLER TRAINING. HVAC system installers shall be trained and certified in the proper installation of HVAC systems including ducts and equipment by a nationally or regionally recognized training or certification program. Uncertified persons may perform HVAC installations when under the direct supervision and responsibility of a person trained and certified to install HVAC systems or contractor licensed to install HVAC systems. Examples of acceptable HVAC training and certification programs include but are not limited to the following:

1. State certified apprenticeship programs.
2. Public utility training programs.
3. Training programs sponsored by trade, labor or statewide energy consulting or verification organizations.
4. Programs sponsored by manufacturing organizations.
5. Other programs acceptable to the enforcing agency.

702.2 SPECIAL INSPECTION [HCD]. When required by the enforcing agency, the owner or the responsible entity acting as the owner's agent shall employ one or more special inspectors to provide inspection or other duties necessary to substantiate compliance with this code. Special inspectors shall demonstrate competence to the satisfaction of the enforcing agency for the particular type of inspection or task to be performed. In addition to other certifications or qualifications acceptable to the enforcing agency, the following certifications or education may be considered by the enforcing agency when evaluating the qualifications of a special inspector:

1. Certification by a national or regional green building program or standard publisher.
2. Certification by a statewide energy consulting or verification organization, such as HERS raters, building performance contractors, and home energy auditors.
3. Successful completion of a third party apprentice training program in the appropriate trade.
4. Other programs acceptable to the enforcing agency.

Notes:
1. Special inspectors shall be independent entities with no financial interest in the materials or the project they are inspecting for compliance with this code.
2. HERS raters are special inspectors certified by the California Energy Commission (CEC) to rate homes in California according to the Home Energy Rating System (HERS).

[BSC] When required by the enforcing agency, the owner or the responsible entity acting as the owner's agent shall employ one or more special inspectors to provide inspection or other duties necessary to substantiate compliance with this code. Special inspectors shall demonstrate competence to the satisfaction of the enforcing agency for the particular type of inspection or task to be performed. In addition, the special inspector shall have a certification from a recognized state, national or international association, as determined by the local agency. The area of certification shall be closely related to the primary job function, as determined by the local agency.

Note: Special inspectors shall be independent entities with no financial interest in the materials or the project they are inspecting for compliance with this code.

703 VERIFICATIONS

703.1 DOCUMENTATION. Documentation used to show compliance with this code shall include but is not limited to, construction documents, plans, specifications, builder or installer certification, inspection reports, or other methods acceptable to the enforcing agency which demonstrate substantial conformance. When specific documentation or special inspection is necessary to verify compliance, that method of compliance will be specified in the appropriate section or identified applicable checklist.

andrulaitis+mixon
2040 ALAMEDA PADRE SERRA SUITE 107
SANTA BARBARA CALIFORNIA 805 899 2528

Proposed project/remodel for:
Kellow Addition
310 E. Micheltorena
Santa Barbara, CA 93101

LICENSE

JOB NUMBER
21.009

CONTENTS
2019 CAL GREEN STANDARDS

ANDRULAITIS MIXON ARCHITECTS, INC. expressly reserves their common law copyright and other property rights in these plans. These plans are not to be reproduced, changed, or copied in any form or manner whatsoever, nor are they to be assigned to a third party without first obtaining the written permission and consent of Andrulaitis Mixon Architects, Inc. In the event of unauthorized reuse of these plans by a third party, the third party shall hold Andrulaitis Mixon Architects, Inc. harmless.

SUBMITTALS

DATE	TYPE
09.28.21	SFDB
11.29.21	SFDB
01.31.22	SFDB

ISSUE DATE
01.31.22

REVISIONS

NO.	DATE	TYPE

G-002

DISCLAIMER: *THIS DOCUMENT IS PROVIDED AND INTENDED TO BE USED AS A MEANS TO INDICATE AREAS OF COMPLIANCE WITH THE CALIFORNIA GREEN BUILDING STANDARDS (CALGREEN) CODE. DUE TO THE VARIABLES BETWEEN BUILDING DEPARTMENT JURISDICTIONS, THIS CHECKLIST IS TO BE USED ON AN INDIVIDUAL PROJECT BASIS AND MAY BE MODIFIED BY THE END USER TO MEET THOSE INDIVIDUAL NEEDS. THE END USER ASSUMES ALL RESPONSIBILITY ASSOCIATED WITH THE USE OF THIS DOCUMENT, INCLUDING VERIFICATION WITH THE FULL CODE.*

2019 Low-Rise Residential Mandatory Measures Summary

Requirements for Ventilation and Indoor Air Quality:	
§ 150.0(o)1:	**Requirements for Ventilation and Indoor Air Quality**. All dwelling units must meet the requirements of ASHRAE Standard 62.2, Ventilation and Acceptable Indoor Air Quality in Residential Buildings subject to the amendments specified in § 150.0(o)1.
§ 150.0(o)1C:	**Single Family Detached Dwelling Units.** Single family detached dwelling units, and attached dwelling units not sharing ceilings or floors with other dwelling units, occupiable spaces, public garages, or commercial spaces must have mechanical ventilation airflow provided at rates determined by ASHRAE 62.2 Sections 4.1.1 and 4.1.2 and as specified in § 150.0(o)1C.
§ 150.0(o)1E:	**Multifamily Attached Dwelling Units.** Multifamily attached dwelling units must have mechanical ventilation airflow provided at rates in accordance with Equation 150.0-B and must be either a balanced system or continuous supply or continuous exhaust system. If a balanced system is not used, all units in the building must use the same system type and the dwelling-unit envelope leakage must be ≤ 0.3 CFM at 50 Pa (0.2 inch water) per square foot of dwelling unit envelope surface area and verified in accordance with Reference Residential Appendix RA3.8.
§ 150.0(o)1F:	**Multifamily Building Central Ventilation Systems.** Central ventilation systems that serve multiple dwelling units must be balanced to provide ventilation airflow for each dwelling unit served at a rate equal to or greater than the rate specified by Equation 150.0-B. All unit airflows must be within 20 percent of the unit with the lowest airflow rate as it relates to the individual unit's minimum required airflow rate needed for compliance.
§ 150.0(o)1G:	**Kitchen Range Hoods.** Kitchen range hoods must be rated for sound in accordance with Section 7.2 of ASHRAE 62.2.
§ 150.0(o)2:	**Field Verification and Diagnostic Testing.** Dwelling unit ventilation airflow must be verified in accordance with Reference Residential Appendix RA3.7. A kitchen range hood must be verified in accordance with Reference Residential Appendix RA3.7.4.3 to confirm it is rated by HVI to comply with the airflow rates and sound requirements as specified in Section 5 and 7.2 of ASHRAE 62.2.
Pool and Spa Systems and Equipment Measures:	
§ 110.4(a):	**Certification by Manufacturers.** Any pool or spa heating system or equipment must be certified to have all of the following: a thermal efficiency that complies with the Appliance Efficiency Regulations; an on-off switch mounted outside of the heater that allows shutting off the heater without adjusting the thermostat setting; a permanent weatherproof plate or card with operating instructions; and must not use electric resistance heating.*
§ 110.4(b)1:	**Piping.** Any pool or spa heating system or equipment must be installed with at least 36 inches of pipe between the filter and the heater, or dedicated suction and return lines, or built-in or built-up connections to allow for future solar heating.
§ 110.4(b)2:	**Covers.** Outdoor pools or spas that have a heat pump or gas heater must have a cover.
§ 110.4(b)3:	**Directional Inlets and Time Switches for Pools.** Pools must have directional inlets that adequately mix the pool water, and a time switch that will allow all pumps to be set or programmed to run only during off-peak electric demand periods.
§ 110.5:	**Pilot Light.** Natural gas pool and spa heaters must not have a continuously burning pilot light.
§ 150.0(p):	**Pool Systems and Equipment Installation.** Residential pool systems or equipment must meet the specified requirements for pump sizing, flow rate, piping, filters, and valves.*
Lighting Measures:	
§ 110.9:	**Lighting Controls and Components.** All lighting control devices and systems, ballasts, and luminaires must meet the applicable requirements of § 110.9.*
§ 150.0(k)1A:	**Luminaire Efficacy.** All installed luminaires must meet the requirements in Table 150.0-A.
§ 150.0(k)1B:	**Blank Electrical Boxes.** The number of electrical boxes that are more than five feet above the finished floor and do not contain a luminaire or other device must be no greater than the number of bedrooms. These electrical boxes must be served by a dimmer, vacancy sensor control, or fan speed control.
§ 150.0(k)1C:	**Recessed Downlight Luminaires in Ceilings.** Luminaires recessed into ceilings must meet all of the requirements for: insulation contact (IC) labeling; air leakage; sealing; maintenance; and socket and light source as described in § 150.0(k)1C.
§ 150.0(k)1D:	**Electronic Ballasts for Fluorescent Lamps.** Ballasts for fluorescent lamps rated 13 watts or greater must be electronic and must have an output frequency no less than 20 kHz.
§ 150.0(k)1E:	**Night Lights, Step Lights, and Path Lights.** Night lights, step lights and path lights are not required to comply with Table 150.0-A or be controlled by vacancy sensors provided they are rated to consume no more than 5 watts of power and emit no more than 150 lumens.
§ 150.0(k)1F:	**Lighting Integral to Exhaust Fans.** Lighting integral to exhaust fans (except when installed by the manufacturer in kitchen exhaust hoods) must meet the applicable requirements of § 150.0(k).*
§ 150.0(k)1G:	**Screw based luminaires.** Screw based luminaires must contain lamps that comply with Reference Joint Appendix JA8.*
§ 150.0(k)1H:	**Light Sources in Enclosed or Recessed Luminaires.** Lamps and other separable light sources that are not compliant with the JA8 elevated temperature requirements, including marking requirements, must not be installed in enclosed or recessed luminaires.
§ 150.0(k)1I:	**Light Sources in Drawers, Cabinets, and Linen Closets.** Light sources internal to drawers, cabinetry or linen closets are not required to comply with Table 150.0-A or be controlled by vacancy sensors provided that they are rated to consume no more than 5 watts of power, emit no more than 150 lumens, and are equipped with controls that automatically turn the lighting off when the drawer, cabinet or linen closet is closed.
§ 150.0(k)2A:	**Interior Switches and Controls.** All forward phase cut dimmers used with LED light sources must comply with NEMA SSL 7A.
§ 150.0(k)2B:	**Interior Switches and Controls.** Exhaust fans must be controlled separately from lighting systems.*
§ 150.0(k)2C:	**Interior Switches and Controls.** Lighting must have readily accessible wall-mounted controls that allow the lighting to be manually turned ON and OFF.*
§ 150.0(k)2D:	**Interior Switches and Controls.** Controls and equipment must be installed in accordance with manufacturer's instructions.
§ 150.0(k)2E:	**Interior Switches and Controls.** Controls must not bypass a dimmer, occupant sensor, or vacancy sensor function if the control is installed to comply with § 150.0(k).
§ 150.0(k)2F:	**Interior Switches and Controls.** Lighting controls must comply with the applicable requirements of § 110.9.

2019 Low-Rise Residential Mandatory Measures Summary

§ 150.0(k)2G:	**Interior Switches and Controls.** An energy management control system (EMCS) may be used to comply with control requirements if it: provides functionality of the specified control according to § 110.9; meets the Installation Certificate requirements of § 130.4; meets the EMCS requirements of § 130.0(e); and meets all other requirements in § 150.0(k)2.
§ 150.0(k)2H:	**Interior Switches and Controls.** A multiscene programmable controller may be used to comply with dimmer requirements in § 150.0(k) if it provides the functionality of a dimmer according to § 110.9, and complies with all other applicable requirements in § 150.0(k)2.
§ 150.0(k)2I:	**Interior Switches and Controls.** In bathrooms, garages, laundry rooms, and utility rooms, at least one luminaire in each of these spaces must be controlled by an occupant sensor or a vacancy sensor providing automatic-off functionality. If an occupant sensor is installed, it must be initially configured to manual-on operation using the manual control required under Section 150.0(k)2C.
§ 150.0(k)2J:	**Interior Switches and Controls.** Luminaires that are or contain light sources that meet Reference Joint Appendix JA8 requirements for dimming, and that are not controlled by occupancy or vacancy sensors, must have dimming controls.*
§ 150.0(k)2K:	**Interior Switches and Controls.** Under cabinet lighting must be controlled separately from ceiling-installed lighting systems.
§ 150.0(k)3A:	**Residential Outdoor Lighting.** For single-family residential buildings, outdoor lighting permanently mounted to a residential building, or to other buildings on the same lot, must meet the requirement in item § 150.0(k)3Ai (ON and OFF switch) and the requirements in either § 150.0(k)3Aii (photocell and either a motion sensor or automatic time switch control) or § 150.0(k)3Aiii (astronomical time clock), or an EMCS.
§ 150.0(k)3B:	**Residential Outdoor Lighting.** For low-rise residential buildings with four or more dwelling units, outdoor lighting for private patios, entrances, balconies, and porches; and residential parking lots and carports with less than eight vehicles per site must comply with either § 150.0(k)3A or with the applicable requirements in Sections 110.9, 130.0, 130.2, 130.4, 140.7 and 141.0.
§ 150.0(k)3C:	**Residential Outdoor Lighting.** For low-rise residential buildings with four or more dwelling units, any outdoor lighting for residential parking lots or carports with a total of eight or more vehicles per site and any outdoor lighting not regulated by § 150.0(k)3B or § 150.0(k)3D must comply with the applicable requirements in Sections 110.9, 130.0, 130.2, 130.4, 140.7 and 141.0.
§ 150.0(k)4:	**Internally illuminated address signs.** Internally illuminated address signs must comply with § 140.8; or must consume no more than 5 watts of power as determined according to § 130.0(c).
§ 150.0(k)5:	**Residential Garages for Eight or More Vehicles.** Lighting for residential parking garages for eight or more vehicles must comply with the applicable requirements for nonresidential garages in Sections 110.9, 130.0, 130.1, 130.4, 140.6, and 141.0.
§ 150.0(k)6A:	**Interior Common Areas of Low-rise Multifamily Residential Buildings.** In a low-rise multifamily residential building where the total interior common area in a single building equals 20 percent or less of the floor area, permanently installed lighting for the interior common areas in that building must be comply with Table 150.0-A and be controlled by an occupant sensor.
§ 150.0(k)6B:	**Interior Common Areas of Low-rise Multifamily Residential Buildings.** In a low-rise multifamily residential building where the total interior common area in a single building equals more than 20 percent of the floor area, permanently installed lighting for the interior common areas in that building must: i. Comply with the applicable requirements in Sections 110.9, 130.0, 130.1, 140.6 and 141.0; and ii. Lighting installed in corridors and stairwells must be controlled by occupant sensors that reduce the lighting power in each space by at least 50 percent. The occupant sensors must be capable of turning the light fully on and off from all designed paths of ingress and egress.
Solar Ready Buildings:	
§ 110.10(a)1:	**Single Family Residences.** Single family residences located in subdivisions with 10 or more single family residences and where the application for a tentative subdivision map for the residences has been deemed complete and approved by the enforcement agency, which do not have a photovoltaic system installed, must comply with the requirements of § 110.10(b) through § 110.10(e).
§ 110.10(a)2:	**Low-rise Multifamily Buildings.** Low-rise multi-family buildings that do not have a photovoltaic system installed must comply with the requirements of § 110.10(b) through § 110.10(d).
§ 110.10(b)1:	**Minimum Solar Zone Area.** The solar zone must have a minimum total area as described below. The solar zone must comply with access, pathway, smoke ventilation, and spacing requirements as specified in Title 24, Part 9 or other parts of Title 24 or in any requirements adopted by a local jurisdiction. The solar zone total area must be comprised of areas that have no dimension less than 5 feet and are no less than 80 square feet each for buildings with roof areas less than or equal to 10,000 square feet or no less than 160 square feet each for buildings with roof areas greater than 10,000 square feet. For single family residences, the solar zone must be located on the roof or overhang of the building and have a total area no less than 250 square feet. For low-rise multi-family buildings the solar zone must be located on the roof or overhang of the building, or on the roof or overhang of another structure located within 250 feet of the building, or on covered parking installed with the building project, and have a total area no less than 15 percent of the total roof area of the building excluding any skylight area. The solar zone requirement is applicable to the entire building, including mixed occupancy.*
§ 110.10(b)2:	**Azimuth.** All sections of the solar zone located on steep-sloped roofs must be oriented between 90 degrees and 300 degrees of true north.
§ 110.10(b)3A:	**Shading.** The solar zone must not contain any obstructions, including but not limited to: vents, chimneys, architectural features, and roof mounted equipment.*
§ 110.10(b)3B:	**Shading.** Any obstruction located on the roof or any other part of the building that projects above a solar zone must be located at least twice the distance, measured in the horizontal plane, of the height difference between the highest point of the obstruction and the horizontal projection of the nearest point of the solar zone, measured in the vertical plane.*
§ 110.10(b)4:	**Structural Design Loads on Construction Documents.** For areas of the roof designated as a solar zone, the structural design loads for roof dead load and roof live load must be clearly indicated on the construction documents.
§ 110.10(c):	**Interconnection Pathways.** The construction documents must indicate: a location reserved for inverters and metering equipment and a pathway reserved for routing of conduit from the solar zone to the point of interconnection with the electrical service; and for single family residences and central water-heating systems, a pathway reserved for routing plumbing from the solar zone to the water-heating system.
§ 110.10(d):	**Documentation.** A copy of the construction documents or a comparable document indicating the information from § 110.10(b) through § 110.10(c) must be provided to the occupant.
§ 110.10(e)1:	**Main Electrical Service Panel.** The main electrical service panel must have a minimum busbar rating of 200 amps.
§ 110.10(e)2:	**Main Electrical Service Panel.** The main electrical service panel must have a reserved space to allow for the installation of a double pole circuit breaker for a future solar electric installation. The reserved space must be permanently marked as "For Future Solar Electric".

2019 Low-Rise Residential Mandatory Measures Summary

*NOTE: Low-rise residential buildings subject to the Energy Standards must comply with all applicable mandatory measures, regardless of the compliance approach used. Review the respective section for more information. *Exceptions may apply.*
(01/2020)

Building Envelope Measures:	
§ 110.6(a)1:	**Air Leakage.** Manufactured fenestration, exterior doors, and exterior pet doors must limit air leakage to 0.3 CFM per square foot or less when tested per NFRC-400, ASTM E283 or AAMA/WDMA/CSA 101/I.S.2/A440-2011.*
§ 110.6(a)5:	**Labeling.** Fenestration products and exterior doors must have a label meeting the requirements of § 10-111(a).
§ 110.6(b):	**Field fabricated exterior doors and fenestration** products must use U-factors and solar heat gain coefficient (SHGC) values from Tables 110.6-A, 110.6-B, or JA4.5 for exterior doors. They must be caulked and/or weather-stripped.*
§ 110.7:	**Air Leakage.** All joints, penetrations, and other openings in the building envelope that are potential sources of air leakage must be caulked, gasketed, or weather stripped.
§ 110.8(a):	**Insulation Certification by Manufacturers.** Insulation must be certified by the Department of Consumer Affairs, Bureau of Household Goods and Services (BHGS).
§ 110.8(g):	**Insulation Requirements for Heated Slab Floors.** Heated slab floors must be insulated per the requirements of § 110.8(g).
§ 110.8(i):	**Roofing Products Solar Reflectance and Thermal Emittance.** The thermal emittance and aged solar reflectance values of the roofing material must meet the requirements of § 110.8(i) and be labeled per §10-113 when the installation of a cool roof is specified on the CF1R.
§ 110.8(j):	**Radiant Barrier.** When required, radiant barriers must have an emittance of 0.05 or less and be certified to the Department of Consumer Affairs.
§ 150.0(a):	**Ceiling and Rafter Roof Insulation.** Minimum R-22 insulation in wood-frame ceiling; or the weighted average U-factor must not exceed 0.043. Minimum R-19 or weighted average U-factor of 0.054 or less in a rafter roof alteration. Attic access doors must have permanently attached insulation using adhesive or mechanical fasteners. The attic access must be gasketed to prevent air leakage. Insulation must be installed in direct contact with a continuous roof or ceiling which is sealed to limit infiltration and exfiltration as specified in § 110.7, including but not limited to placing insulation either above or below the roof deck or on top of a drywall ceiling.*
§ 150.0(b):	**Loose-fill Insulation.** Loose fill insulation must meet the manufacturer's required density for the labeled R-value.
§ 150.0(c):	**Wall Insulation.** Minimum R-13 insulation in 2x4 inch wood framing wall or have a U-factor of 0.102 or less, or R-20 in 2x6 inch wood framing or have a U-factor of 0.071 or less. Opaque non-framed assemblies must have an overall assembly U-factor not exceeding 0.102. Masonry walls must meet Tables 150.1-A or B.*
§ 150.0(d):	**Raised-floor Insulation.** Minimum R-19 insulation in raised wood framed floor or 0.037 maximum U-factor.*
§ 150.0(f):	**Slab Edge Insulation.** Slab edge insulation must meet all of the following: have a water absorption rate, for the insulation material alone without facings, no greater than 0.3 percent; have a water vapor permeance no greater than 2.0 perm per inch; be protected from physical damage and UV light deterioration; and, when installed as part of a heated slab floor, meet the requirements of § 110.8(g).
§ 150.0(g)1:	**Vapor Retarder.** In climate zones 1 through 16, the earth floor of unvented crawl space must be covered with a Class I or Class II vapor retarder. This requirement also applies to controlled ventilation crawl space for buildings complying with the exception to § 150.0(d).
§ 150.0(g)2:	**Vapor Retarder.** In climate zones 14 and 16, a Class I or Class II vapor retarder must be installed on the conditioned space side of all insulation in all exterior walls, vented attics, and unvented attics with air-permeable insulation.
§ 150.0(q):	**Fenestration Products.** Fenestration, including skylights, separating conditioned space from unconditioned space or outdoors must have a maximum U-factor of 0.58; or the weighted average U-factor of all fenestration must not exceed 0.58.*
Fireplaces, Decorative Gas Appliances, and Gas Log Measures:	
§ 110.5(e)	**Pilot Light.** Continuously burning pilot lights are not allowed for indoor and outdoor fireplaces.
§ 150.0(e)1:	**Closable Doors.** Masonry or factory-built fireplaces must have a closable metal or glass door covering the entire opening of the firebox.
§ 150.0(e)2:	**Combustion Intake.** Masonry or factory-built fireplaces must have a combustion outside air intake, which is at least six square inches in area and is equipped with a readily accessible, operable, and tight-fitting damper or combustion-air control device.*
§ 150.0(e)3:	**Flue Damper.** Masonry or factory-built fireplaces must have a flue damper with a readily accessible control.*
Space Conditioning, Water Heating, and Plumbing System Measures:	
§ 110.0-§ 110.3:	**Certification.** Heating, ventilation and air conditioning (HVAC) equipment, water heaters, showerheads, faucets, and all other regulated appliances must be certified by the manufacturer to the California Energy Commission.*
§ 110.2(a):	**HVAC Efficiency.** Equipment must meet the applicable efficiency requirements in Table 110.2-A through Table 110.2-K.*
§ 110.2(b):	**Controls for Heat Pumps with Supplementary Electric Resistance Heaters.** Heat pumps with supplementary electric resistance heaters must have controls that prevent supplementary heater operation when the heating load can be met by the heat pump alone; and in which the cut-on temperature for compression heating is higher than the cut-on temperature for supplementary heating, and the cut-off temperature for compression heating is higher than the cut-off temperature for supplementary heating.*
§ 110.2(c):	**Thermostats.** All heating or cooling systems not controlled by a central energy management control system (EMCS) must have a setback thermostat.*
§ 110.3(c)4:	**Water Heating Recirculation Loops Serving Multiple Dwelling Units.** Water heating recirculation loops serving multiple dwelling units must meet the air release valve, backflow prevention, pump priming, pump isolation valve, and recirculation loop connection requirements of § 110.3(c)4.
§ 110.3(c)6:	**Isolation Valves.** Instantaneous water heaters with an input rating greater than 6.8 kBtu per hour (2 kW) must have isolation valves with hose bibbs or other fittings on both cold and hot water lines to allow for flushing the water heater when the valves are closed.
§ 110.5:	**Pilot Lights.** Continuously burning pilot lights are prohibited for natural gas: fan-type central furnaces; household cooking appliances (except appliances without an electrical supply voltage connection with pilot lights that consume less than 150 Btu per hour); and pool and spa heaters.*
§ 150.0(h)1:	**Building Cooling and Heating Loads.** Heating and/or cooling loads are calculated in accordance with the ASHRAE Handbook, Equipment Volume, Applications Volume, and Fundamentals Volume; the SMACNA Residential Comfort System Installation Standards Manual; or the ACCA Manual J using design conditions specified in § 150.0(h)2.

2019 Low-Rise Residential Mandatory Measures Summary

§ 150.0(h)3A:	**Clearances.** Air conditioner and heat pump outdoor condensing units must have a clearance of at least five feet from the outlet of any dryer
§ 150.0(h)3B:	**Liquid Line Drier.** Air conditioners and heat pump systems must be equipped with liquid line filter driers if required, as specified by the manufacturer's instructions.
§ 150.0(j)1:	**Storage Tank Insulation.** Unfired hot water tanks, such as storage tanks and backup storage tanks for solar water-heating systems, must have a minimum of R-12 external insulation or R-16 internal insulation where the internal insulation R-value is indicated on the exterior of the tank.
§ 150.0(j)2A:	**Water Piping, Solar Water-heating System Piping, and Space Conditioning System Line Insulation.** All domestic hot water piping must be insulated as specified in Section 609.11 of the California Plumbing Code. In addition, the following piping conditions must have a minimum insulation wall thickness of one inch or a minimum insulation R-value of 7.7: the first five feet of cold water pipes from the storage tank; all hot water piping with a nominal diameter equal to or greater than 3/4 inch and less than one inch; all hot water piping with a nominal diameter less than 3/4 inch that is: associated with a domestic hot water recirculation system, from the heating source to storage tank or between tanks, buried below grade, and from the heating source to kitchen fixtures.*
§ 150.0(j)3:	**Insulation Protection.** Piping insulation must be protected from damage, including that due to sunlight, moisture, equipment maintenance, and wind as required by Section 120.3(b). Insulation exposed to weather must be water retardant and protected from UV light (no adhesive tapes). Insulation covering chilled water piping and refrigerant suction piping located outside the conditioned space must include, or be protected by, a Class I or Class II vapor retarder. Pipe insulation buried below grade must be installed in a waterproof and non-crushable casing or sleeve.
§ 150.0(n)1:	**Gas or Propane Water Heating Systems.** Systems using gas or propane water heaters to serve individual dwelling units must include all of the following: A dedicated 125 volt, 20 amp electrical receptacle connected to the electric panel with a 120/240 volt 3 conductor, 10 AWG copper branch circuit, within three feet of the water heater without obstruction. Both ends of the unused conductor must be labeled with the word "spare" and be electrically isolated. Have a reserved single pole circuit breaker space in the electrical panel adjacent to the circuit breaker for the branch circuit and labeled with the words "Future 240V Use"; a Category III or IV vent, or a Type B vent with straight pipe between the outside termination and the space where the water heater is installed; a condensate drain that is no more than two inches higher than the base of the water heater, and allows natural draining without pump assistance; and a gas supply line with a capacity of at least 200,000 Btu per hour.
§ 150.0(n)2:	**Recirculating Loops.** Recirculating loops serving multiple dwelling units must meet the requirements of § 110.3(c)5.
§ 150.0(n)3:	**Solar Water-heating Systems.** Solar water-heating systems and collectors must be certified and rated by the Solar Rating and Certification Corporation (SRCC), the International Association of Plumbing and Mechanical Officials, Research and Testing (IAPMO R&T), or by a listing agency that is approved by the Executive Director.
Ducts and Fans Measures:	
§ 110.8(d)3:	**Ducts.** Insulation installed on an existing space-conditioning duct must comply with § 604.0 of the California Mechanical Code (CMC). If a contractor installs the insulation, the contractor must certify to the customer, in writing, that the insulation meets this requirement.
§ 150.0(m)1:	**CMC Compliance.** All air-distribution system ducts and plenums must meet the requirements of the CMC §§ 601.0, 602.0, 603.0, 604.0, 605.0 and ANSI/SMACNA-006-2006 HVAC Duct Construction Standards Metal and Flexible 3rd Edition. Portions of supply-air and return-air ducts and plenums must be insulated to a minimum installed level of R-6.0 or a minimum installed level of R-4.2 when ducts are entirely in conditioned space as confirmed through field verification and diagnostic testing (RA3.1.4.3.8). Portions of the duct system completely exposed and surrounded by directly conditioned space are not required to be insulated. Connections of metal ducts and inner core of flexible ducts must be mechanically fastened. Openings must be sealed with mastic, tape, or other duct-closure system that meets the applicable requirements of UL 181, UL 181A, or UL 181B or aerosol sealant that meets the requirements of UL 723. If mastic or tape is used to seal openings greater than ¼ inch, the combination of mastic and either mesh or tape must be used. Building cavities, support platforms for air handlers, and plenums designed or constructed with materials other than sealed sheet metal, duct board or flexible duct must not be used to convey conditioned air. Building cavities and support platforms may contain ducts. Ducts installed in cavities and support platforms must not be compressed to cause reductions in the cross-sectional area.*
§ 150.0(m)2:	**Factory-Fabricated Duct Systems.** Factory-fabricated duct systems must comply with applicable requirements for duct construction, connections, and closures; joints and seams of duct systems and their components must not be sealed with cloth back rubber adhesive duct tapes unless such tape is used in combination with mastic and draw bands.
§ 150.0(m)3:	**Field-Fabricated Duct Systems.** Field-fabricated duct systems must comply with applicable requirements for: pressure-sensitive tapes, mastics, sealants, and other requirements specified for duct construction.
§ 150.0(m)7:	**Backdraft Damper.** Fan systems that exchange air between the conditioned space and outdoors must have backdraft or automatic dampers.
§ 150.0(m)8:	**Gravity Ventilation Dampers.** Gravity ventilating systems serving conditioned space must have either automatic or readily accessible, manually operated dampers in all openings to the outside, except combustion inlet and outlet air openings and elevator shaft vents.
§ 150.0(m)9:	**Protection of Insulation.** Insulation must be protected from damage, sunlight, moisture, equipment maintenance, and wind. Insulation exposed to weather must be suitable for outdoor service. For example, protected by aluminum, sheet metal, painted canvas, or plastic cover. Cellular foam insulation must be protected as above or painted with a coating that is water retardant and provides shielding from solar radiation.
§ 150.0(m)10:	**Porous Inner Core Flex Duct.** Porous inner core flex ducts must have a non-porous layer between the inner core and outer vapor barrier.
§ 150.0(m)11:	**Duct System Sealing and Leakage Test.** When space conditioning systems use forced air duct systems to supply conditioned air to an occupiable space, the ducts must be sealed and duct leakage tested, as confirmed through field verification and diagnostic testing, in accordance with § 150.0(m)11 and Reference Residential Appendix RA3.
§ 150.0(m)12:	**Air Filtration.** Space conditioning systems with ducts exceeding 10 feet and the supply side of ventilation systems must have MERV 13 or equivalent filters. Filters for space conditioning systems must have a two inch depth or can be one inch if sized per Equation 150.0-A. Pressure drops and labeling must meet the requirements in §150.0(m)12. Filters must be accessible for regular service.*
§ 150.0(m)13:	**Space Conditioning System Airflow Rate and Fan Efficacy.** Space conditioning systems that use ducts to supply cooling must have a hole for the placement of a static pressure probe, or a permanently installed static pressure probe in the supply plenum. Airflow must be ≥ 350 CFM per ton of nominal cooling capacity, and an air-handling unit fan efficacy ≤ 0.45 watts per CFM for gas furnace air handlers and ≤ 0.58 watts per CFM for all others. Small duct high velocity systems must provide an airflow ≥ 250 CFM per ton of nominal cooling capacity, and an air-handling unit fan efficacy ≤ 0.62 watts per CFM. Field verification testing is required in accordance with Reference Residential Appendix RA3.3.*

andrulaitis+mixon
2040 ALAMEDA PADRE SERRA SUITE 107
SANTA BARBARA CALIFORNIA 805 899 2528

Proposed project/remodel for:
Kellow Addition
310 E. Micheltorena
Santa Barbara, CA 93101

LICENSE

JOB NUMBER
21.009

CONTENTS
2019 RESIDENTIAL MANDATORY MEASURES

ANDRULAITIS MIXON ARCHITECTS, INC. expressly reserves their common law copyright and other property rights in these plans. These plans are not to be reproduced, changed, or copied in any form or manner whatsoever, nor are they to be assigned to a third party without first obtaining the written permission and consent of Andrulaitis Mixon Architects, Inc. In the event of unauthorized reuse of these plans by a third party, the third party shall hold Andrulaitis Mixon Architects, Inc. harmless.

SUBMITTALS

DATE	TYPE
09.28.21	SFDB
11.29.21	SFDB
01.31.22	SFDB

ISSUE DATE
01.31.22

REVISIONS

NO.	DATE	TYPE

G-003

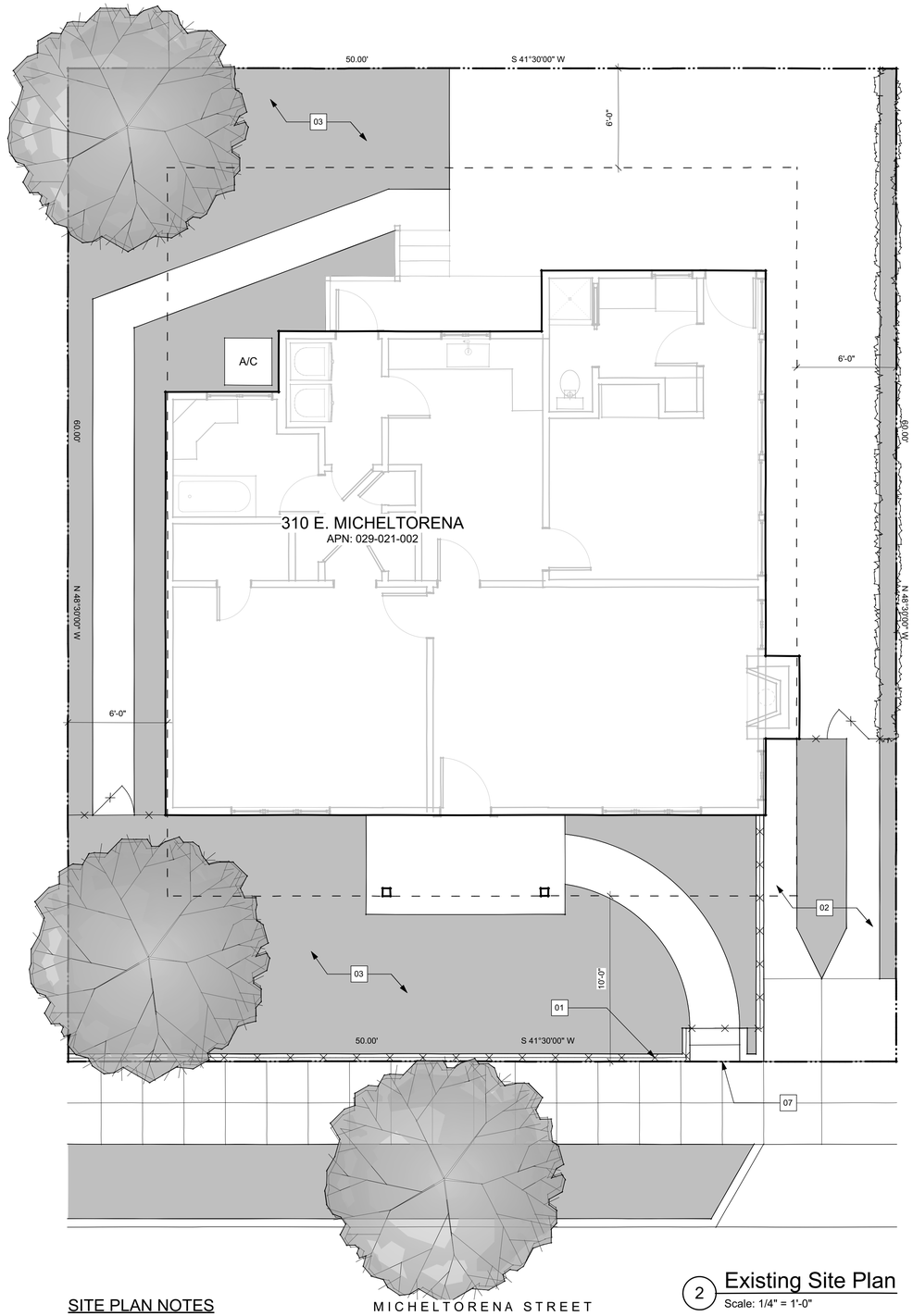

2 Existing Site Plan
Scale: 1/4" = 1'-0"

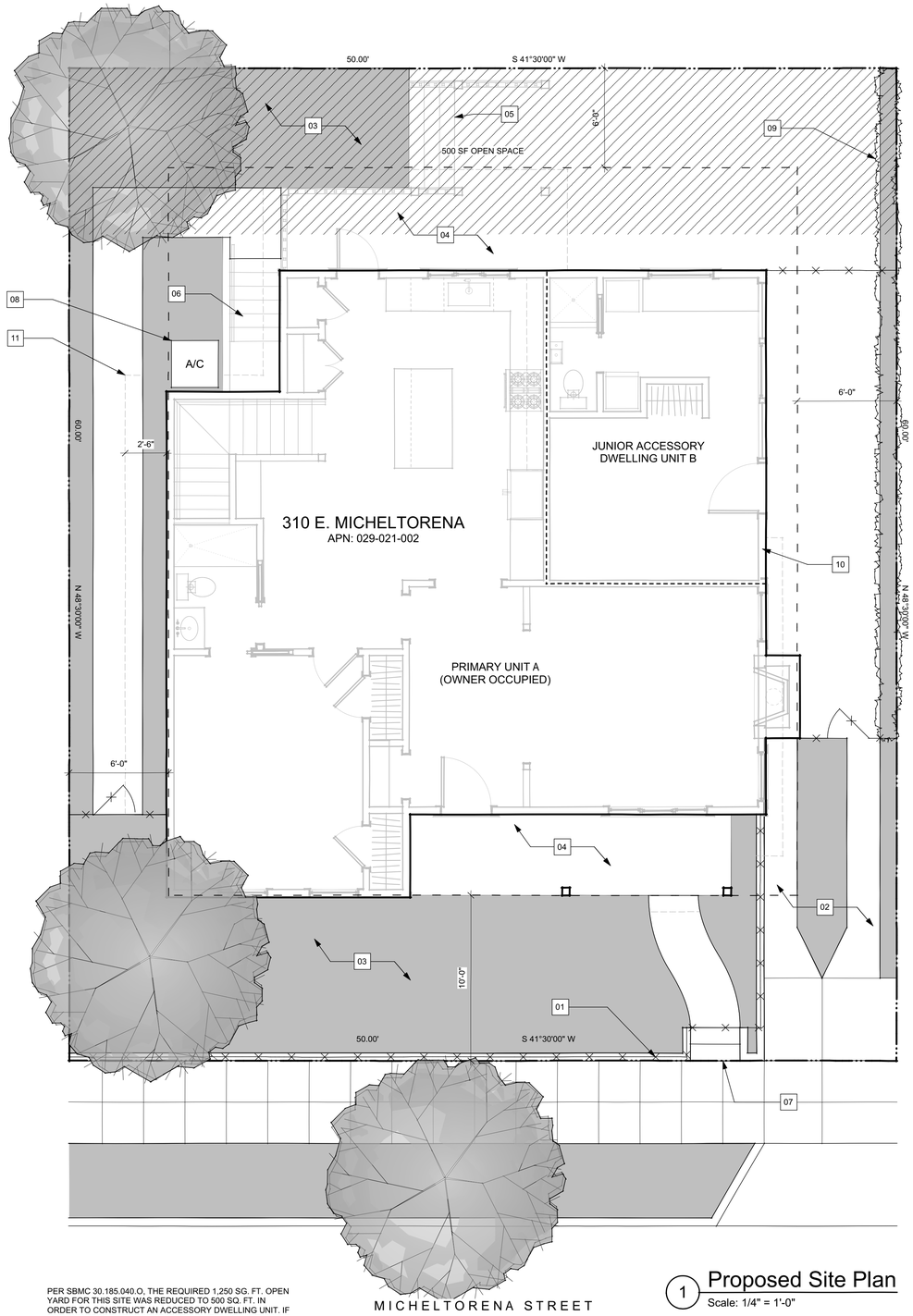

1 Proposed Site Plan
Scale: 1/4" = 1'-0"

SITE PLAN NOTES

01. (E) SITE WALL & PICKET FENCE TO REMAIN
02. (E) CONCRETE RIBBON DRIVEWAY TO REMAIN
03. (E) LANDSCAPING TO REMAIN
04. NEW COVERED CONCRETE PORCH
05. CONCRETE STAIRS
06. CONCRETE STAIRS TO BASEMENT
07. (E) STAIRS TO REMAIN
08. RELOCATED AC CONDENSOR
09. (E) 20 FT TALL BAMBOO HEDGE
10. INDEPENDENT EXTERIOR ACCESS FOR ACCESSORY DWELLING UNIT
11. 30" EAVE OVERHANG < MAX 36" ALLOWED IN SETBACK

PER SBMC 30.185.040.O, THE REQUIRED 1,250 SG. FT. OPEN YARD FOR THIS SITE WAS REDUCED TO 500 SQ. FT. IN ORDER TO CONSTRUCT AN ACCESSORY DWELLING UNIT. IF FOR ANY REASON THE ACCESSORY DWELLING UNIT IS NOT MAINTAINED ON THE LOT I N CONFORMANCE WITH SBMC 30.185.040, THE LOT SHAL BE BROUGHT INTO COMPLIANCE WITH CURRENT REQUIREMENTS INCLUDING OPEN YARD, SETBACKS AND COVERED PARKING. NO REMAINING OPEN YARD AREA ON THE SITE MAY BE FURTHER REDUCED BY ADDITIONS OR ALTERATIONS TO THE PRIMARY RESIDENCE

andrulaitis+mixon
2040 ALAMEDA PADRE SERRA SUITE 107
SANTA BARBARA CALIFORNIA 805 899 2528

Proposed project/remodel for:
Kellow Addition
310 E. Micheltorena
Santa Barbara, CA 93101

LICENSE

JOB NUMBER
21.009

CONTENTS
SITE PLAN

ANDRULAITIS MIXON ARCHITECTS, INC. expressly reserves their common law copyright and other property rights in these plans. These plans are not to be reproduced, changed, or copied in any form or manner whatsoever, nor are they to be assigned to a third party without first obtaining the written permission and consent of Andrulaitis Mixon Architects, Inc. In the event of unauthorized reuse of these plans by a third party, the third party shall hold Andrulaitis Mixon Architects, Inc. harmless.

SUBMITTALS

DATE	TYPE
09.28.21	SFDB
11.29.21	SFDB
01.31.22	SFDB

ISSUE DATE
01.31.22

REVISIONS

NO.	DATE	TYPE

A-100

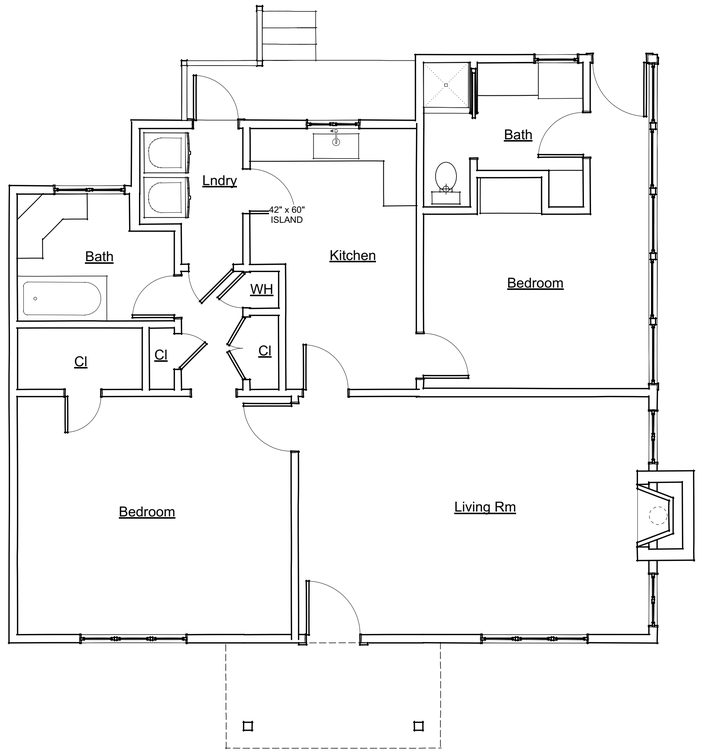

1 1st Floor Plan
Scale: 1/4" = 1'-0"

PLAN NOTES

andrulaitis+mixon
2040 ALAMEDA PADRE SERRA
SANTA BARBARA SUITE 107
CALIFORNIA 805 899 2528

Proposed project/remodel for:
Kellow Addition
310 E. Micheltorena
Santa Barbara, CA 93101

LICENSE

JOB NUMBER
21.009

CONTENTS
EXISTING
FLOOR PLAN

ANDRULAITIS MIXON ARCHITECTS, INC. expressly reserves their common law copyright and other property rights in these plans. These plans are not to be reproduced, changed, or copied in any form or manner whatsoever, nor are they to be assigned to a third party without first obtaining the written permission and consent of Andrulaitis Mixon Architects, Inc. In the event of unauthorized reuse of these plans by a third party, the third party shall hold Andrulaitis Mixon Architects, Inc. harmless.

SUBMITTALS

DATE	TYPE
09.28.21	SFDB
11.29.21	SFDB
01.31.22	SFDB

ISSUE DATE
01.31.22

REVISIONS

NO.	DATE	TYPE

A-101

DOOR SCHEDULE

Door ID	W x HT	Thickness	L Sidelt Wid	R Sidelt Wid	Elev Type	Door Construction	Door Finish	Frame Construction	Frame Finish	Door Details A-501 Head Detail	Jamb Detail	Sill Detail	Hardware Group	Assembly Rating	Comments
01	3'0" x 6'8"	1 3/4"				WD	PT	WD	PT	1	1	2			
02	2'6" x 6'8"	1 3/4"				WD	PT	WD	PT	5	5	-			
03	2'6" x 6'8"	1 3/4"				WD	PT	WD	PT	5	5	-			
04	2'8" x 6'8"	1 3/4"				WD	PT	WD	PT	5	5	-			
05	2'6" x 6'8"	1 3/4"				WD	PT	WD	PT	8	9	-			
06	2'6" x 6'8"	1 3/4"				WD	PT	WD	PT	8	9	-			
07	3'0" x 6'8"	1 3/4"				WD	PT	WD	PT	5	5	-			
08	2'0" x 6'8"	1 3/4"				WD	PT	WD	PT	5	5	-			
09	2'6" x 6'8"	1 3/4"				WD	PT	WD	PT	1	1	2			
10	2'4" x 6'8"	1 3/4"				WD	PT	WD	PT	8	9	-			
12	3'0" x 6'8"	1 3/4"				WD	PT	WD	PT	1	1	2			
13	2'8" x 6'8"	1 3/4"				WD	PT	WD	PT	5	5	-			
14	2'4" x 6'8"	1 3/4"				WD	PT	WD	PT	5	5	-			
15	2'8" x 6'8"	1 3/4"				WD	PT	WD	PT	5	5	-			
16	2'8" x 6'8"	1 3/4"				WD	PT	WD	PT	5	5	-			
17	5'0" x 6'8"	1 3/4"				WD	PT	WD	PT	10	11	10			
18	5'0" x 6'8"	1 3/4"				WD	PT	WD	PT	10	11	10			
19	2'6" x 6'8"	1 3/4"				WD	PT	WD	PT	5	5	-			
20	2'6" x 6'8"	1 3/4"				WD	PT	WD	PT	5	5	-0			
21	5'0" x 6'8"	1 3/4"				FG	PT	FG	PT	3	3	4			
22	4'6" x 6'8"	1 3/4"				WD	PT	WD	PT	6	7	-			

GENERAL DOOR NOTES

A. EVERY EXIT DOOR SHALL BE OPENABLE FROM THE INSIDE WITHOUT THE USE OF A KEY OR ANY SPECIAL KNOWLEDGE OR EFFORT. SPECIAL LOCKING DEVICES SHALL BE OF AN APPROVED TYPE. FLUSH BOLTS OR SURFACE BOLTS ARE PROHIBITED.
B. ALL CATCHING AND LOCKING DOORS THAT ARE HAND ACTIVATED AND WHICH ARE IN THE PATH OF TRAVEL, SHALL BE OPERABLE WITH A SINGLE EFFORT BY LEVER TYPE HARDWARE, BY PANIC BARS, PUSH-PULL ACTIVATING BARS, OR OTHER HARDWARE DESIGNED TO PROVIDE PASSAGE WITHOUT REQUIRING THE ABILITY TO GRASP THE OPENING HARDWARE.
C. HAND-ACTIVATED DOOR OPENING HARDWARE SHALL BE CENTERED BETWEEN 34" AND 44" ABOVE THE FINISH FLOOR.
D. MAXIMUM EFFORT TO OPERATE DOORS SHALL NOT EXCEED 5 LBS FOR EXTERIOR DOORS AND 5 LBS FOR INTERIOR DOORS, SUCH PULL OR PUSH EFFORT BEING APPLIED AT RIGHT ANGLES TO HINGED DOORS AND AT THE CENTER PLANE OF SLIDING DOORS.
E. DOOR LOCKING/LATCHING HARDWARE SHALL COMPLY WITH THE CALIFORNIA REFERENCED STANDARDS CODE (CRSC), SECTION 12-10-202. LEVER HANDLES SHALL COMPLY WITH SUBSECTION (f): LEVERS MUST BE CURVED AND SHALL RETURN TO WITHIN 1/2 INCH OF THE DOOR.
F. REFER TO FLOOR PLANS FOR SWINGING OF DOORS
G. DOORS TO BE CENTERED IN WALL OR OFFSET 4" FROM WALL AS SHOWN ON FLOOR PLANS, UNLESS NOTED OTHERWISE
H. HEAD HEIGHTS ARE FROM FINISH FLOOR
I. DOOR SIZES TO BE VERIFIED IN FIELD BY GC PRIOR TO FABRICATION
J. GC TO PROVIDE SHOP DRAWINGS FOR ARCHITECT'S APPROVAL
K. THE BOTTOM 10 INCHES (254 MM) OF ALL DOORS SHALL HAVE A SMOOTH UNINTERRUPTED SURFACE TO ALLOW THE DOOR TO BE OPENED BY A WHEELCHAIR FOOTREST WITHOUT CREATING A TRAP OR HAZARDOUS CONDITION
L. NOT USED
M. PROVIDE WEATHERSTRIPPING FOR ALL EXTERIOR DOOR OPENINGS

WINDOW SCHEDULE

Window ID	W x HT	Head Height	Elev Type	U-Value	SHGC	Window Material	Window Finish	Window Glazing	Frame Details Head Detail	Jamb Detail	Sill Detail	Comments
A	3'0" x 5'0"	6'8"		.30	.23	FBG	PT	DUAL	13	13	14	
B	3'0" x 4'6"	6'8"		.30	.23	FBG	PT	DUAL	13	13	14	
C	6'0" x 4'6"	6'8"		.30	.23	FBG	PT	DUAL	13	13	14	
E	5'0" x 3'0"	6'8"		.30	.23	FBG	PT	DUAL	13	13	14	
F	4'0" x 3'0"	6'8"		.30	.23	FBG	PT	DUAL	13	13	14	
G	2'0" x 3'0"	6'8"		.30	.23	FBG	PT	DUAL	13	13	14	
H	8'0" x 4'6"	6'8"		.30	.23	FBG	PT	DUAL	13	13	14	
I	6'0" x 6'6"	8'8"		.30	.23	FBG	PT	DUAL	13	13	14	
J	3'6" x 6'0"	7'8"		.30	.23	FBG	PT	DUAL	13	13	14	

GENERAL WINDOW NOTES

A. SEE EXTERIOR ELEVATIONS FOR SWING OF WINDOWS
B. SEE INTERIOR ELEVATIONS FOR SWING OF INTERIOR WINDOWS
C. HEAD HEIGHTS ARE FROM FINISH FLOOR
D. SAFETY GLAZING SHALL BE PROVIDED IN THE FOLLOWING LOCATIONS:
I. FIXED AND OPERABLE PANELS OF SWINGING, SLIDING, AND BIFOLD DOORS
II. ALL SHOWER/TUB ENCLOSURE GLAZING WITHIN 5' OF STANDING SURFACE, INCLUDING WINDOWS.
III. ALL GLAZING WITHIN A 24" ARC OF EITHER VERTICAL EDGE OF THE DOORWAY AND WITHIN 5' OF THE WALKING SURFACE
IV. ALL GLAZING ADJACENT TO STAIRWAYS, LANDINGS AND RAMPS WITHIN 36" HORIZONTALLY OF A WALKING SURFACE AND WITHIN 5' OF STANDING SURFACE
V. ALL GLAZING ADJACENT TO STAIRWAYS WITHIN 5' HORIZONTALLY OF THE BOTTOM TREAD OF A STAIRWAY IN ANY DIRECTION WHEN THE EXPOSED SURFACE IS LESS THAN 36" ABOVE THE LANDING
VI. FIXED AND OPERABLE PANELS WHICH MEET ALL OF THE FOLLOWING:
I. EXPOSED AREA OF AN INDIVIDUAL PANE GREATER THAN 9 SQ. FT.
II. EXPOSED BOTTOM EDGE LESS THAN 18" ABOVE THE FLOOR
III. EXPOSED TOP EDGE GREATER THAN 36" ABOVE THE FLOOR
IV. ONE OR MORE WALKING SURFACE(S) ARE WITHIN 36", MEASURED HORIZONTALLY AND IN A STRAIGHT LINE, OF THE PLANE OF THE GLAZING
E. PROVIDE WEATHERSTRIPPING FOR ALL EXTERIOR WINDOW OPENINGS
F. NOT USED
G. ALL WINDOW SIZES TO BE VERIFIED IN FIELD BY GC PRIOR TO FABRICATION
H. GC TO PROVIDE SHOP DRAWINGS FOR ARCHITECT'S APPROVAL

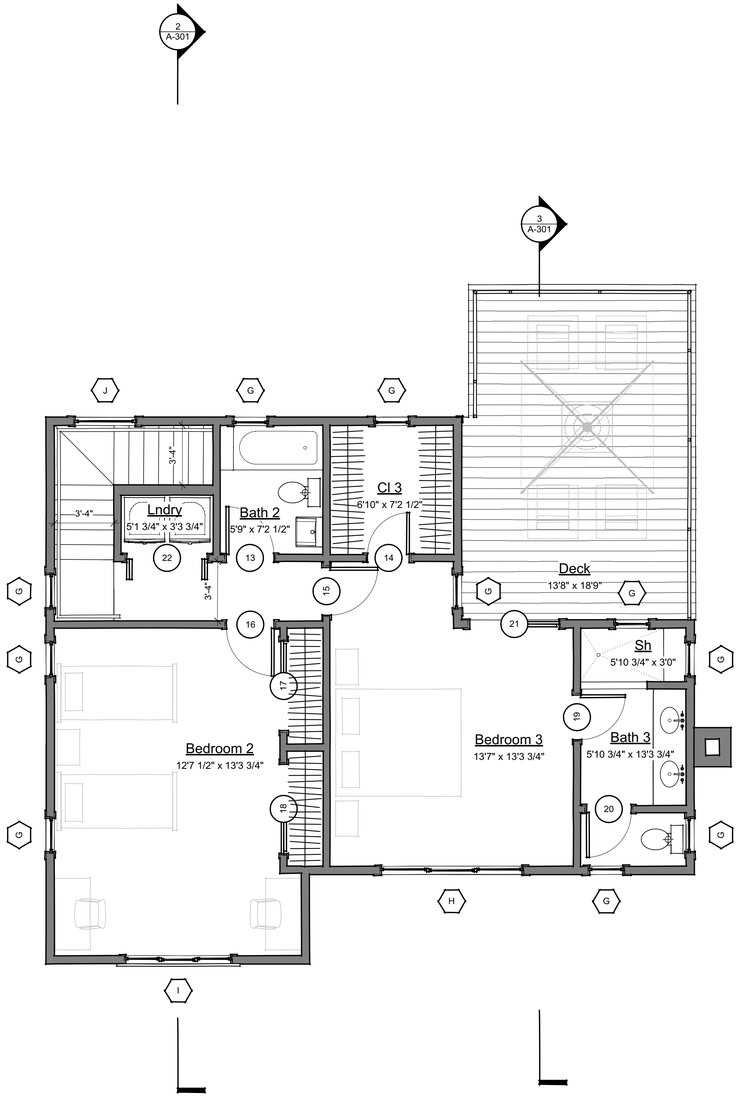

2 2nd Floor Plan
Scale: 1/4" = 1'-0"

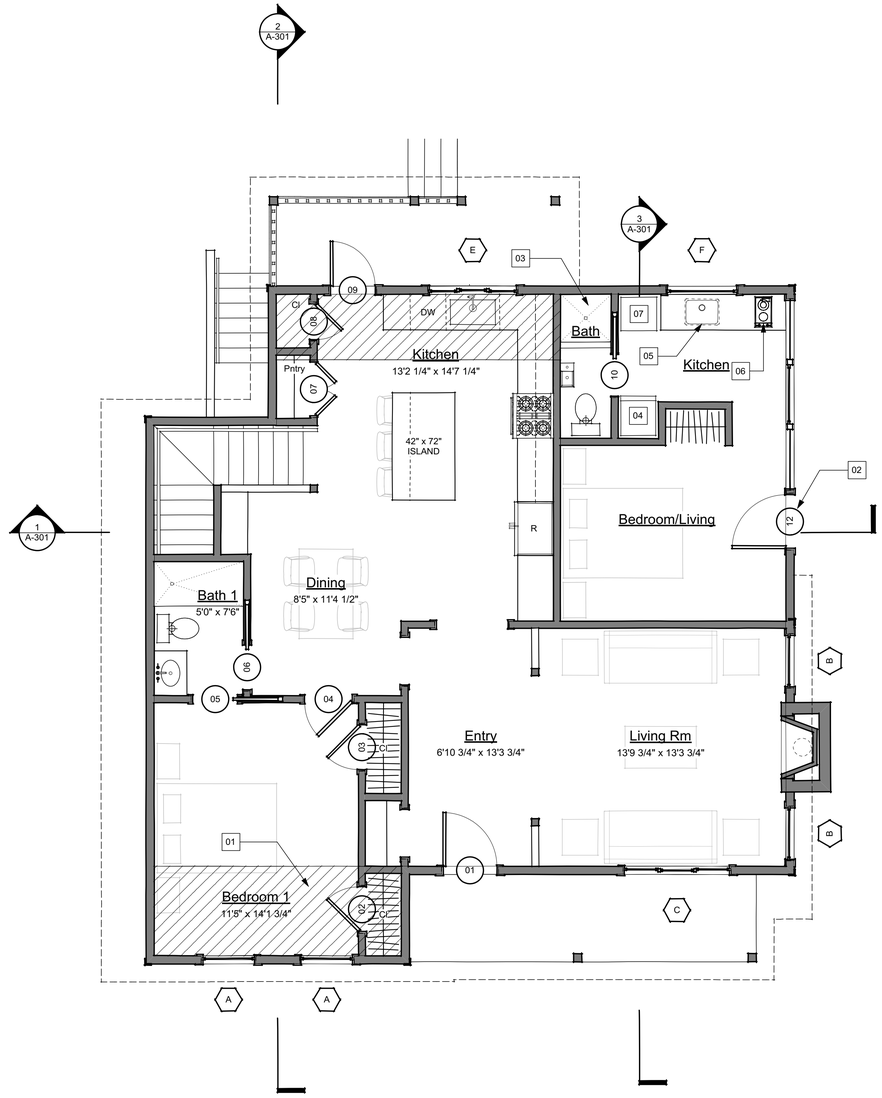

1 1st Floor Plan
Scale: 1/4" = 1'-0"

PLAN NOTES

01. AREA OF 1ST FLOOR ADDITION
02. INDEPENDENT EXTERIOR ACCESS FOR JUNIOR ACCESSORY DWELLING UNIT
03. 32" WIDE X 34" DEEP TILED SHOWER
04. 24" WIDE REFRIGERATOR/FREEZER
05. 23" X 17 1/2" UNDER-MOUNT KITCHEN SINK
06. ELECTRIC COOKTOP
07. STACKING WASHER/DRYER
08. 96 GA TRASH & RECYCING BINS

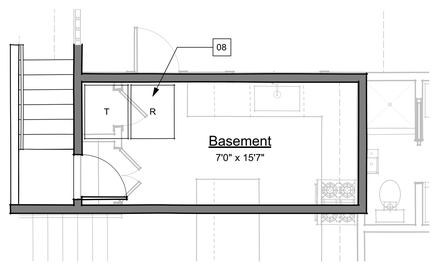

3 Basement
Scale: 1/4" = 1'-0"

andrulaitis+mixon
2040 ALAMEDA PADRE SERRA SUITE 107
SANTA BARBARA CALIFORNIA 805 899 2528

Proposed project/remodel for:
Kellow Addition
310 E. Micheltorena
Santa Barbara, CA 93101

LICENSE

JOB NUMBER
21.009

CONTENTS
FLOOR PLAN

ANDRULAITIS MIXON ARCHITECTS, INC. expressly reserves their common law copyright and other property rights in these plans. These plans are not to be reproduced, changed, or copied in any form or manner whatsoever, nor are they to be assigned to a third party without first obtaining the written permission and consent of Andrulaitis Mixon Architects, Inc. In the event of unauthorized reuse of these plans by a third party, the third party shall hold Andrulaitis Mixon Architects, Inc. harmless.

SUBMITTALS

DATE	TYPE
09.28.21	SFDB
11.29.21	SFDB
01.31.22	SFDB

ISSUE DATE
01.31.22

REVISIONS

NO.	DATE	TYPE

A-102

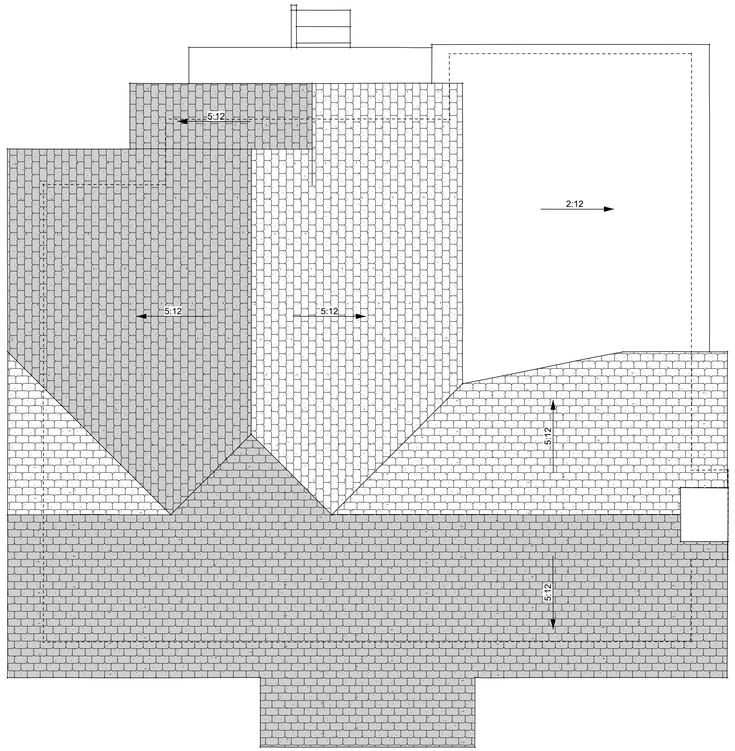

2 Existing Roof Plan
Scale: 1/4" = 1'-0"

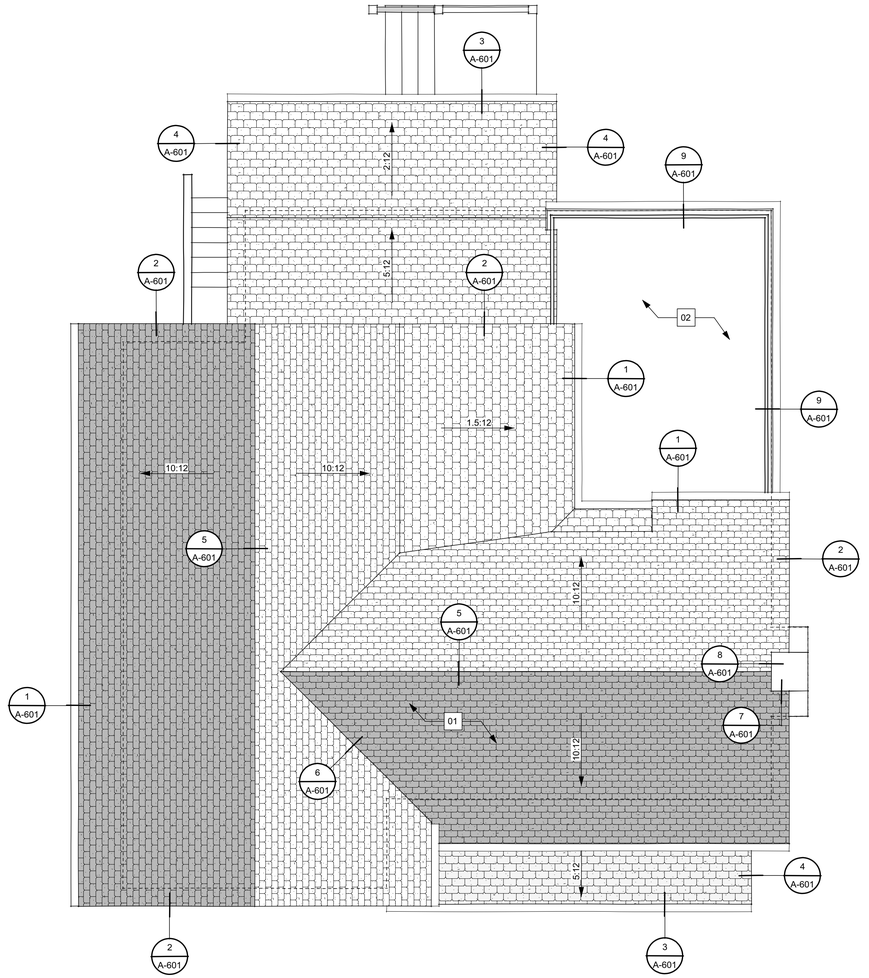

1 Proposed Roof Plan
Scale: 1/4" = 1'-0"

PLAN NOTES

01. ASPHALT SHINGLE ROOFING
02. 1X4 WOOD DECKING

andrulaitis+mixon

2040 ALAMEDA PADRE SERRA SUITE 107
SANTA BARBARA CALIFORNIA 805 899 2528

Proposed project/remodel for:

Kellow Addition

310 E. Micheltorena
Santa Barbara, CA 93101

LICENSE

JOB NUMBER

21.009

CONTENTS

ROOF
PLAN

ANDRULAITIS MIXON ARCHITECTS, INC. expressly reserves their common law copyright and other property rights in these plans. These plans are not to be reproduced, changed, or copied in any form or manner whatsoever, nor are they to be assigned to a third party without first obtaining the written permission and consent of Andrulaitis Mixon Architects, Inc. In the event of unauthorized reuse of these plans by a third party, the third party shall hold Andrulaitis Mixon Architects, Inc. harmless.

SUBMITTALS

DATE	TYPE
09.28.21	SFDB
11.29.21	SFDB
01.31.22	SFDB

ISSUE DATE

01.31.22

REVISIONS

NO.	DATE	TYPE

A-103

ELEVATION NOTES

01.	ASPHALT SHINGLE ROOF
02.	WOOS SIDING, PAINTED
03.	BRICK CHIMNEY
04.	BOARD & BATT SIDING, PAINTED

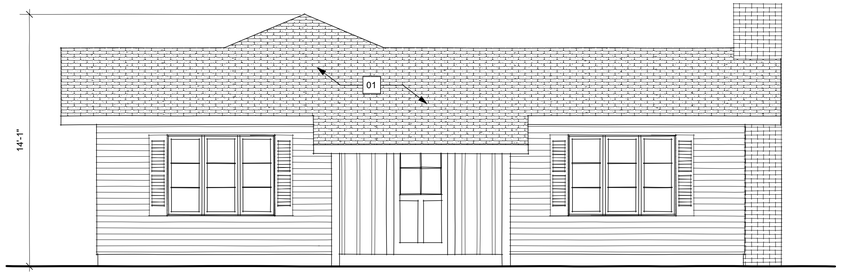

2 Existing North Elevation
Scale: 1/4" = 1'-0"

1 Existing West Elevation
Scale: 1/4" = 1'-0"

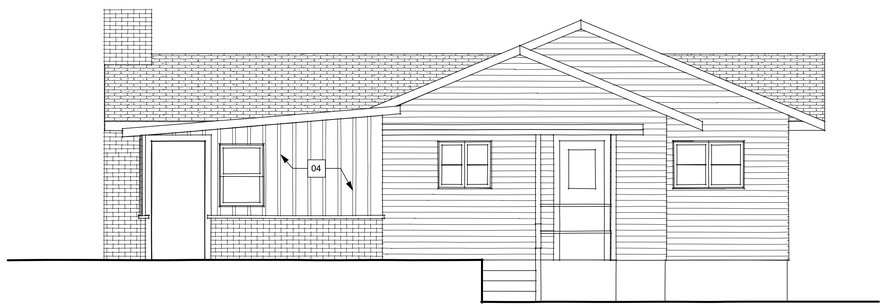

4 Existing South Elevation
Scale: 1/4" = 1'-0"

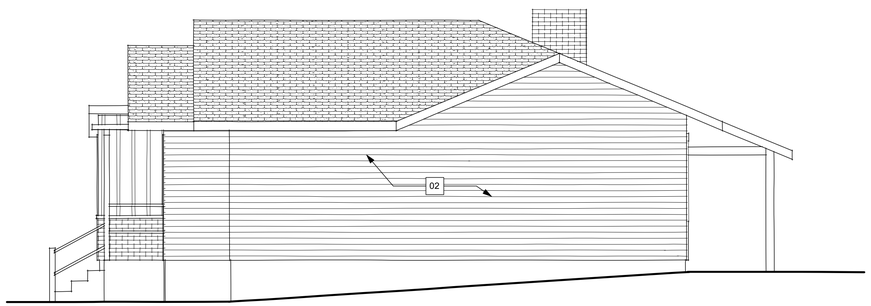

3 Existing East Elevation
Scale: 1/4" = 1'-0"

andrulaitis+mixon
2040 ALAMEDA PADRE SERRA
SANTA BARBARA SUITE 107
CALIFORNIA 805 899 2528

Proposed project/remodel for:
Kellow Addition
310 E. Micheltorena
Santa Barbara, CA 93101

LICENSE

JOB NUMBER
21.009

CONTENTS
EXISTING ELEVATIONS

ANDRULAITIS MIXON ARCHITECTS, INC. expressly reserves their common law copyright and other property rights in these plans. These plans are not to be reproduced, changed, or copied in any form or manner whatsoever, nor are they to be assigned to a third party without first obtaining the written permission and consent of Andrulaitis Mixon Architects, Inc. In the event of unauthorized reuse of these plans by a third party, the third party shall hold Andrulaitis Mixon Architects, Inc. harmless.

SUBMITTALS

DATE	TYPE
09.28.21	SFDB
11.29.21	SFDB
01.31.22	SFDB

ISSUE DATE
01.31.22

REVISIONS

NO.	DATE	TYPE

A-201

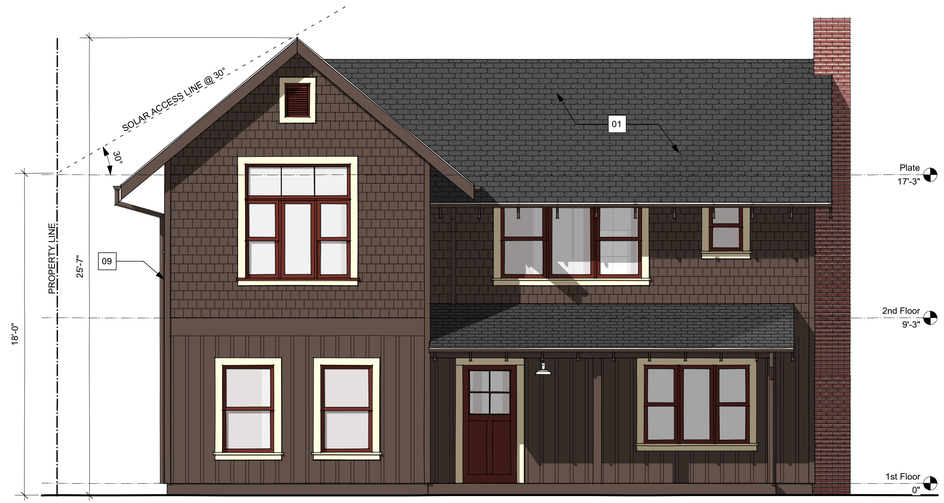

2 North Elevation
Scale: 1/4" = 1'-0"

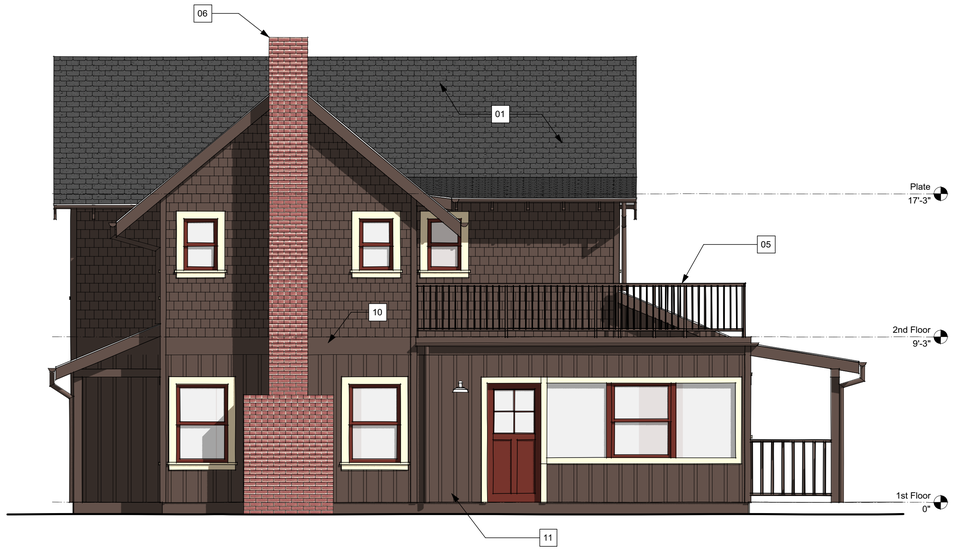

1 West Elevation
Scale: 1/4" = 1'-0"

4 South Elevation
Scale: 1/4" = 1'-0"

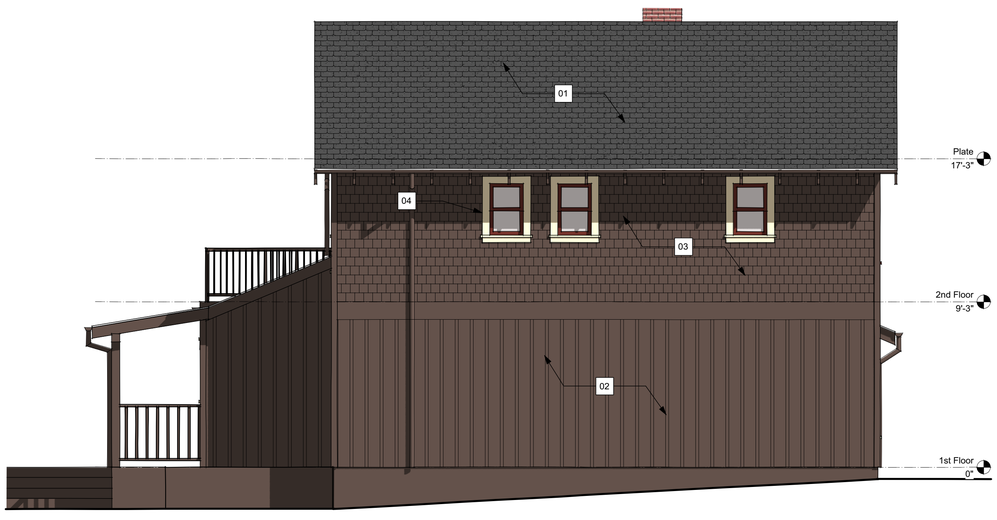

3 East Elevation
Scale: 1/4" = 1'-0"

ELEVATION NOTES

01.	ASPHALT SHINGLE ROOF
02.	BOARD & BATT SIDING W/ 12" SPACING, PAINTED
03.	SHINGLE SIDING, PAINTED
04.	SINGLE HUNG FIBERGLASS WINDOWS W/ 4" TRIM, PAINTED
05.	WOOD RAIL, PAINTED
06.	BRICK CHIMNEY, MATCH EXISTING
07.	FIXED FIBERGLASS WINDOW W/ 4" TRIM, PAINTED
08.	2X8 WOOD EAVES @ 24" O.C. PAINTED
09.	4" CORNER TRIM, PAINTED
10.	12" BELLY BAND, PAINTED
11.	JUNIOR ACCESSORY DWELLING UNIT ENTRANCE
12.	30" EAVE OVERHANG < MAX 36" ALLOWED IN SETBACK

andrulaitis+mixon
2040 ALAMEDA PADRE SERRA
SANTA BARBARA SUITE 107
CALIFORNIA 805 899 2528

Proposed project/remodel for:
Kellow Addition
310 E. Micheltorena
Santa Barbara, CA 93101

LICENSE

JOB NUMBER
21.009

CONTENTS
PROPOSED ELEVATIONS

ANDRULAITIS MIXON ARCHITECTS, INC. expressly reserves their common law copyright and other property rights in these plans. These plans are not to be reproduced, changed, or copied in any form or manner whatsoever, nor are they to be assigned to a third party without first obtaining the written permission and consent of Andrulaitis Mixon Architects, Inc. In the event of unauthorized reuse of these plans by a third party, the third party shall hold Andrulaitis Mixon Architects, Inc. harmless.

SUBMITTALS

DATE	TYPE
09.28.21	SFDB
11.29.21	SFDB
01.31.22	SFDB

ISSUE DATE
01.31.22

REVISIONS

NO.	DATE	TYPE

A-202

andrulaitis +mixon

COLOR BOARD

BODY COLOR	TRIM COLOR	WINDOW/DOOR COLOR
BENJAMIN MOORE "BARK"	BENJAMIN MOORE "MONTGOMERY WHITE"	BENJAMIN MOORE "COTTAGE RED"

ROOF	DOOR HARDWARE	EXTERIOR LIGHT
OWENS CORNING DURATION "ONYX BLACK"	SIGNATURE HARDWARE	IMPERIAL BLACK OUTDOOR WALL MOUNT BARN LIGHT SCONCE

21.009 310 E MICHELTORENA

andrulaitis+mixon
2040 ALAMEDA PADRE SERRA SUITE 107
SANTA BARBARA CALIFORNIA 805 899 2528

Proposed project/remodel for:
Kellow Addition
310 E. Micheltorena
Santa Barbara, CA 93101

LICENSE

JOB NUMBER
21.009

CONTENTS

COLORS,
FINISHES & PHOTOS

ANDRULAITIS MIXON ARCHITECTS, INC. expressly reserves their common law copyright and other property rights in these plans. These plans are not to be reproduced, changed, or copied in any form or manner whatsoever, nor are they to be assigned to a third party without first obtaining the written permission and consent of Andrulaitis Mixon Architects, Inc. In the event of unauthorized reuse of these plans by a third party, the third party shall hold Andrulaitis Mixon Architects, Inc. harmless.

SUBMITTALS

DATE	TYPE
09.28.21	SFDB
11.29.21	SFDB
01.31.22	SFDB

ISSUE DATE
01.31.22

REVISIONS

NO.	DATE	TYPE

A-203

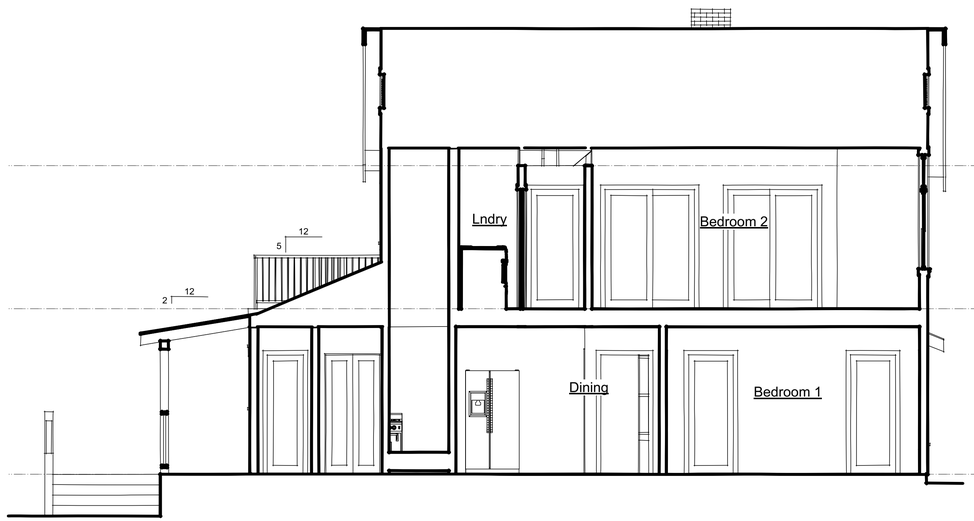

2 Section B
Scale: 1/4" = 1'-0"

1 Section A
Scale: 1/4" = 1'-0"

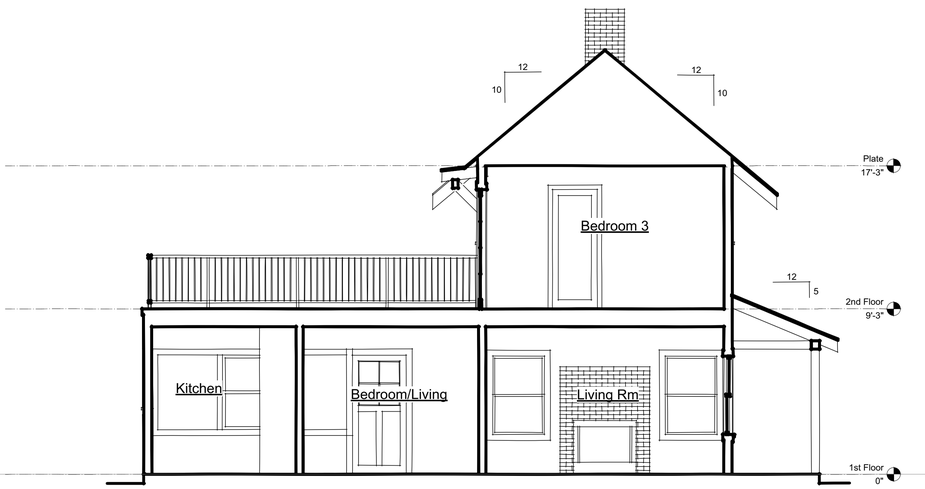

3 Section C
Scale: 1/4" = 1'-0"

andrulaitis+mixon
2040 ALAMEDA PADRE SERRA
SANTA BARBARA SUITE 107
CALIFORNIA 805 899 2528

Proposed project/remodel for:
Kellow Addition
310 E. Micheltorena
Santa Barbara, CA 93101

LICENSE

JOB NUMBER
21.009

CONTENTS
BUILDING SECTIONS
ELEVATIONS

ANDRULAITIS MIXON ARCHITECTS, INC. expressly reserves their common law copyright and other property rights in these plans. These plans are not to be reproduced, changed, or copied in any form or manner whatsoever, nor are they to be assigned to a third party without first obtaining the written permission and consent of Andrulaitis Mixon Architects, Inc. In the event of unauthorized reuse of these plans by a third party, the third party shall hold Andrulaitis Mixon Architects, Inc. harmless.

SUBMITTALS

DATE	TYPE
09.28.21	SFDB
11.29.21	SFDB
01.31.22	SFDB

ISSUE DATE
01.31.22

REVISIONS

NO.	DATE	TYPE

A-301

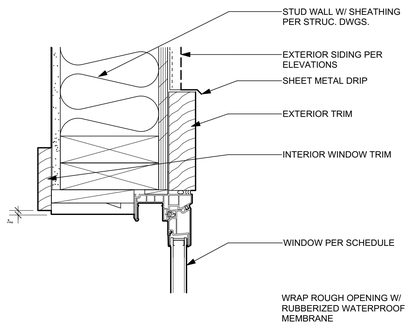

17 WDW HD/JB @ SINGLE HUNG | 3"=1'-0" | 08560-009

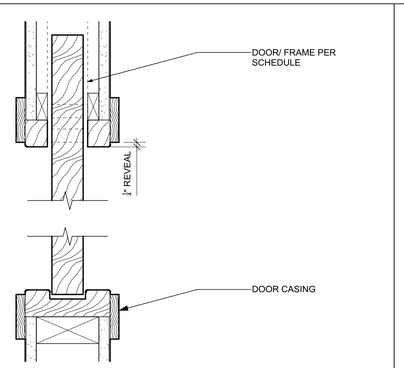

13 POCKET DOOR JAMB | 3"=1'-0" | 08260-010-07007 | 9

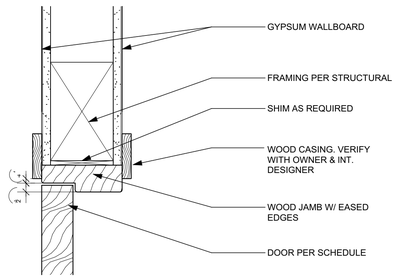

INTERIOR DOOR HEAD/JAMB | 3"=1'-0" | 08210-041-07007 | 5

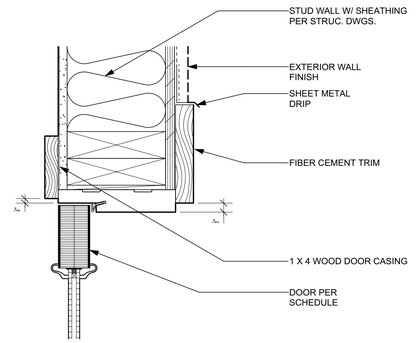

DOOR HEAD/JAMB | 3"=1'-0" | 08210-004 | 1

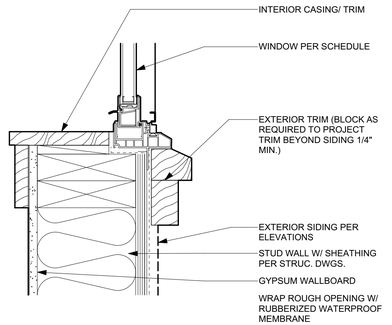

18 WINDOW SILL @ SINGLE HUNG | 3"=1'-0" | 08560-010 | 14

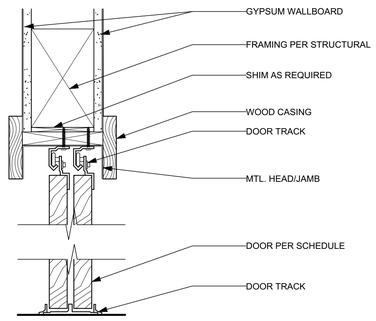

BI-PASS DOOR HEAD/SILL | 3"=1'-0" | 08260-008 | 10

6 DOOR SILL | 3"=1'-0" | 08210-208-12033 | 2

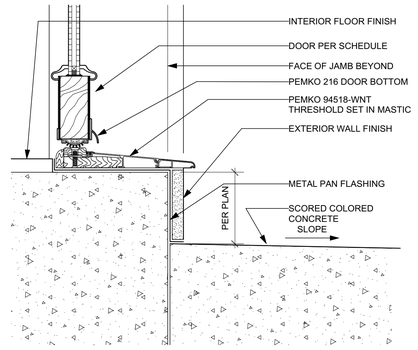

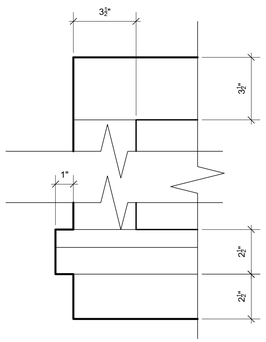

19 EXT. WINDOW TRIM | 3"=1'-0" | 06455-001 | 15

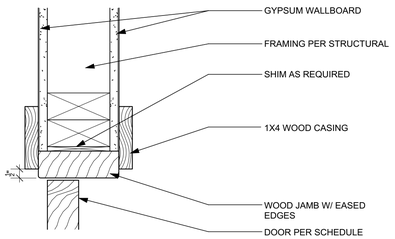

CLOSET DOOR JAMB | 3"=1'-0" | 08260-007 | 11

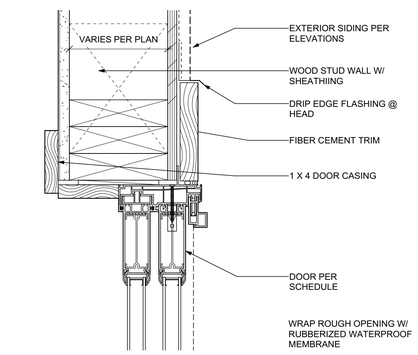

7 SLIDING DOOR HEAD/JAMB | 3"=1'-0" | 08262-003 | 3

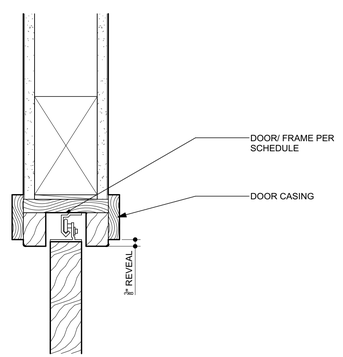

12 POCKET DOOR HEAD | 3"=1'-0" | 08260-009-07007 | 8

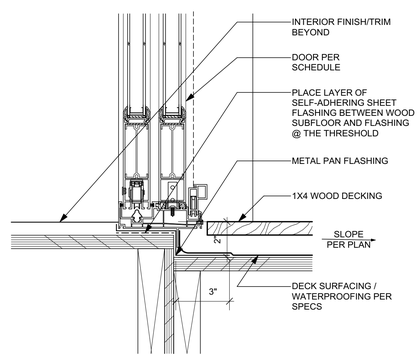

SLIDING BALCONY DOOR SILL | 3"=1'-0" | 08262-005 | 4

20

16

andrulaitis+mixon
2040 ALAMEDA PADRE SERRA SUITE 107
SANTA BARBARA CALIFORNIA 805 899 2528

Proposed project/remodel for:
Kellow Addition
310 E. Micheltorena
Santa Barbara, CA 93101

LICENSE

JOB NUMBER
21.009

CONTENTS
DOOR/WINDOW DETAILS

ANDRULAITIS MIXON ARCHITECTS, INC. expressly reserves their common law copyright and other property rights in these plans. These plans are not to be reproduced, changed, or copied in any form or manner whatsoever, nor are they to be assigned to a third party without first obtaining the written permission and consent of Andrulaitis Mixon Architects, Inc. In the event of unauthorized reuse of these plans by a third party, the third party shall hold Andrulaitis Mixon Architects, Inc. harmless.

SUBMITTALS

DATE	TYPE
09.28.21	SFDB
11.29.21	SFDB
01.31.22	SFDB

ISSUE DATE
01.31.22

REVISIONS

NO.	DATE	TYPE

A-501

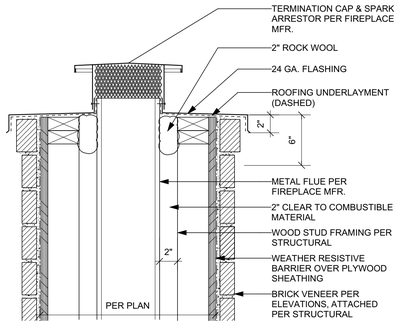

CHIMNEY CAP	1 1/2"=1'-0"	17
	10310-062	

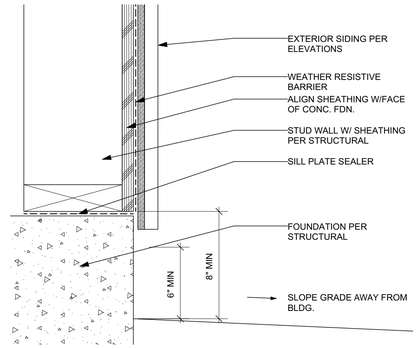

EXTERIOR SIDING @ GRADE	3"=1'-0"	13
	06455-005	

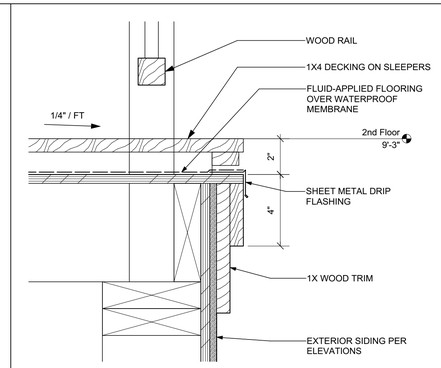

BALCONY EDGE	3"=1'-0"	9
	06455-002	

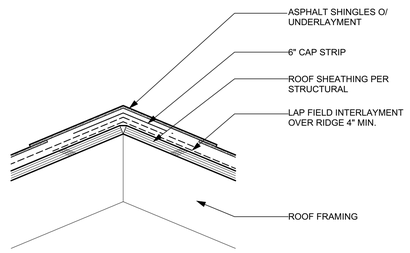

TYP. RIDGE	3"=1'-0"	5
	07310-001-12033	

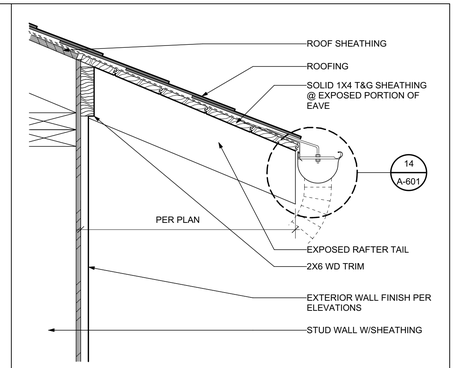

EAVE	1 1/2"=1'-0"	1
	07310-028-12033	

18

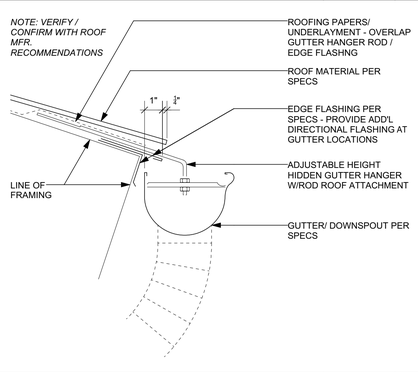

GUTTER - HALF ROUND	3"=1'-0"	14
	07620-106B	

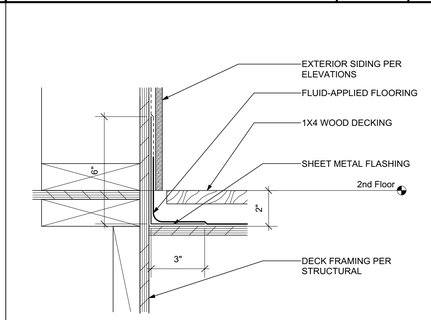

DECK TO WALL	3"=1'-0"	10
	07160-002	

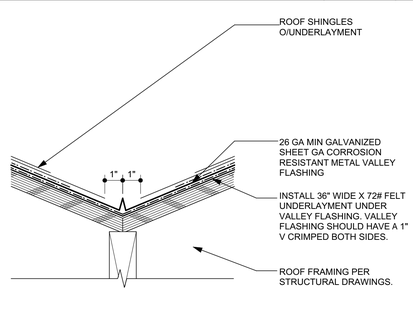

TYPICAL VALLEY	3"=1'-0"	6
	07310-008	

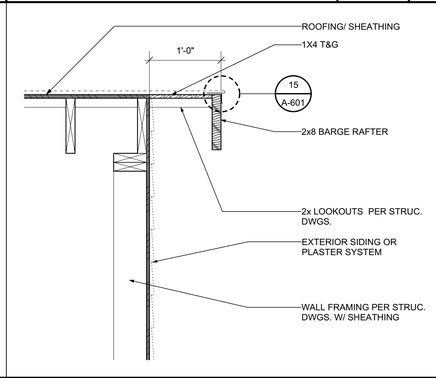

OVERHANGING RAKE	1"=1'-0"	2
	07310-055-12033	

19

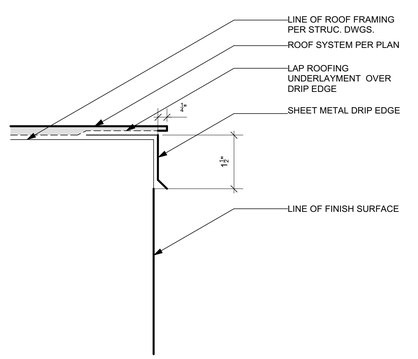

DRIP EDGE AT RAKE	6"=1'-0"	15
	07620-127	

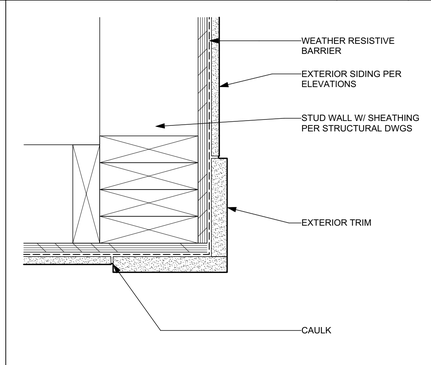

SIDING @ EXT. CORNER	3"=1'-0"	11
	06455-003	

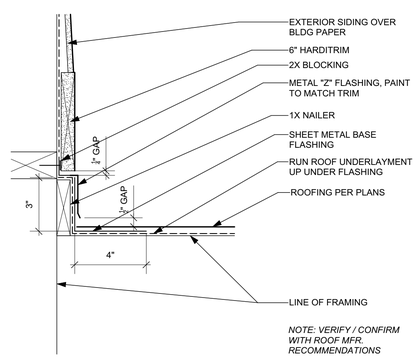

ROOF-TO-WALL (PARALLEL)	3"=1'-0"	7
	07310-051	

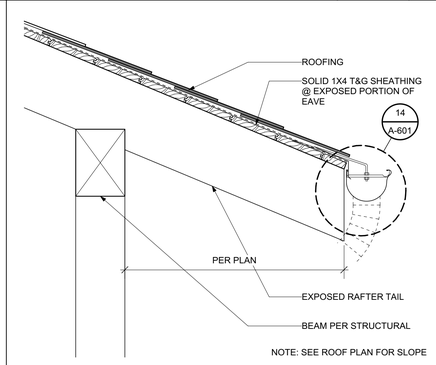

EAVE @ PORCH	1 1/2"=1'-0"	3
	07310-028-07007	

20

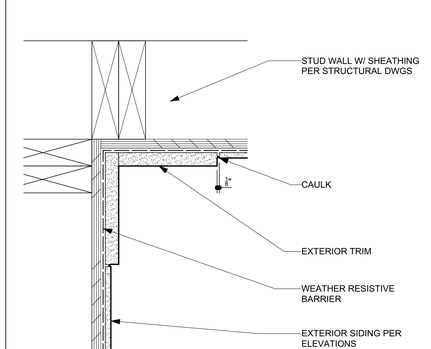

SIDING @ INT. CORNER	3"=1'-0"	12
	06455-004	

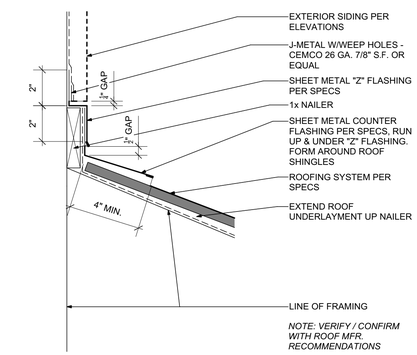

ROOF-TO-WALL (PERP.)	3"=1'-0"	8
	07310-062	

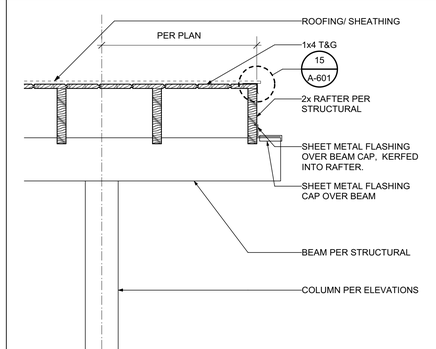

OVERHANGING RAKE @ PORCH	1"=1'-0"	4
	07310-055-07007	

andrulaitis+mixon
2040 ALAMEDA PADRE SERRA SUITE 107
SANTA BARBARA CALIFORNIA 805 899 2528

Proposed project/remodel for:
Kellow Addition
310 E. Micheltorena
Santa Barbara, CA 93101

LICENSE

JOB NUMBER
21.009

CONTENTS
EXTERIOR DETAILS

ANDRULAITIS MIXON ARCHITECTS, INC. expressly reserves their common law copyright and other property rights in these plans. These plans are not to be reproduced, changed, or copied in any form or manner whatsoever, nor are they to be assigned to a third party without first obtaining the written permission and consent of Andrulaitis Mixon Architects, Inc. In the event of unauthorized reuse of these plans by a third party, the third party shall hold Andrulaitis Mixon Architects, Inc. harmless.

SUBMITTALS

DATE	TYPE
09.28.21	SFDB
11.29.21	SFDB
01.31.22	SFDB

ISSUE DATE
01.31.22

REVISIONS

NO.	DATE	TYPE

A-601

Kellow Addition

310 E. Micheltorena St.,
Santa Barbara, CA 93101

STANDARD DETAILS

9 TYPICAL NOTCHING & BORING

PENETRATIONS IN TOP PLATES & SILL PLATES

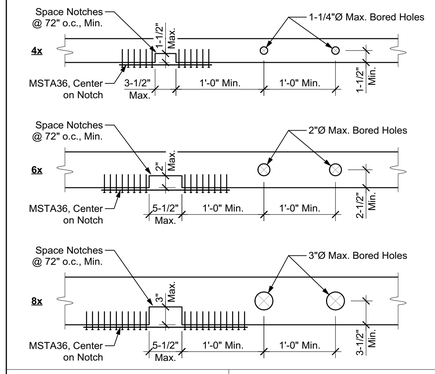

NOTCHING LIMITS FOR WOOD STUDS

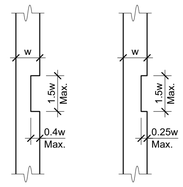

BORING LIMITS FOR WOOD STUDS

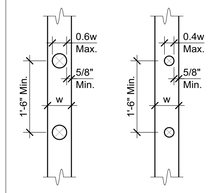

6 TYPICAL FLOOR / ROOF NAILING

Nailing per Plan w/ Spcg.
Denoted as **@ A", B", C"**
A = Boundary Nailing
B = Edge Nailing
C = Field

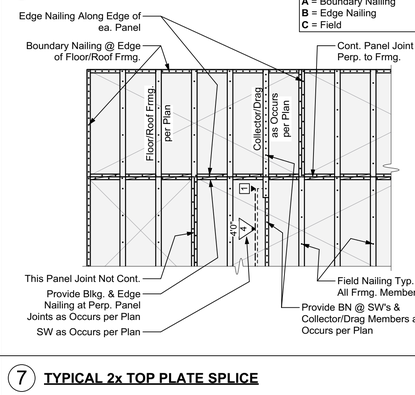

4 TYPICAL CONCRETE SLAB JOINTS

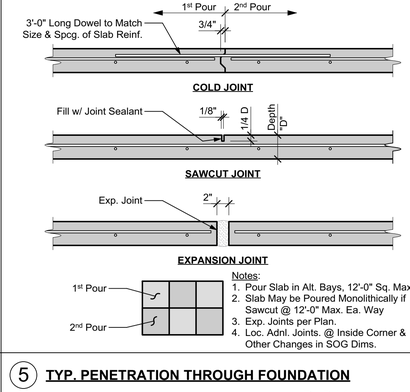

Notes:
1. Pour Slab in Alt. Bays, 12'-0" Sq. Max.
2. Slab May be Poured Monolithically if Sawcut @ 12'-0" Max. Ea. Way
3. Exp. Joints per Plan.
4. Loc. Adnl. Joints. @ Inside Corner & Other Changes in SOG Dims.

1 TYPICAL REINFORCING BAR BENDS

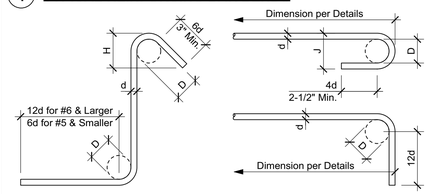

STANDARD TIES & STIRRUPS

Bar Size	D	H (Approx.)
#3	1-1/2"	3"
#4	2"	3"
#5	2-1/2"	3-3/4"
#6	4-1/2"	4-1/2"
#7	5-1/4"	5-1/4"
#8	6"	6"

STANDARD END HOOKS

Bar Size	D	J
#3	2-1/4"	3"
#4	3"	4"
#5	3-3/4"	5"
#6	4-1/2"	6"
#7	5-1/4"	7"
#8	6"	8"

Note:
All Bar Bend Diameters & End Lengths Must Conform to the CRSI Manual of Standard Practice

7 TYPICAL 2x TOP PLATE SPLICE

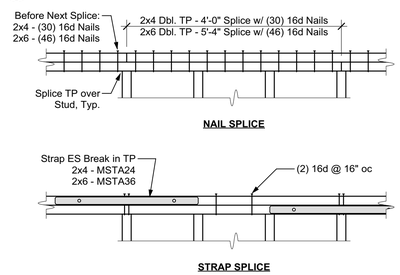

5 TYP. PENETRATION THROUGH FOUNDATION

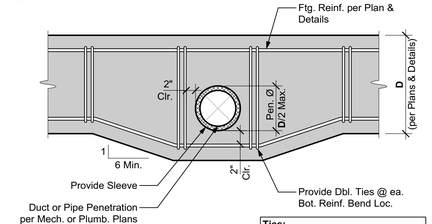

DO NOT Locate Pen. w/n 24" of Any Holdowns

Ties:
- Ftg. Reinf. = (1) Bar T&B, Use #3 Vert. w/ 180° Hook ea. End
- Ftg. Reinf. > (1) Bar T&B, Use #3 Stirrup w/ 135° Hooks @ Top

2 STD. DEVELOPMENT LENGTHS & LAP SPLICES

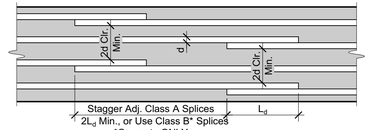

Bar Size	CONCRETE f'c = 2500 psi Length of Lap, Ld & Class A	Class B	Hook Embed Ldh
#3	15 "	19 "	6 "
#4	19 "	25 "	7 "
#5	24 "	31 "	9 "
#6	29 "	37 "	11 "
#7	41 "	54 "	12 "
#8	47 "	61 "	14 "

Bar Size	MASONRY f'm = 1500 psi Length of Lap, Ld	Hook Embed Ldh
#3	12 "	5 "
#4	20 "	7 "
#5	31 "	8 "
#6	59 "	10 "
#7	80 "	11 "
#8	121 "	13 "

TYPICAL SHEAR WALL FRAMING NOTES:

1. Single sided shear walls may be placed on EITHER side of the framed wall.
2. Sill plates on masonry or concrete to be pressure treated per Timber / Lumber specifications. Sill plate thickness per SW Sched.
3. Wall studs and blkg. are required at all adjoining panel edges. Thickness of wall studs and blkg. at panel edges per SW Sched.
4. Where plywood is applied on both faces of a wall, edge nails shall be staggered on adjacent panel edges OR panel joints shall be offset to fall on different framing members. Plywood joint and sill plate nailing shall be staggered in all cases.
5. Plywood panels shall butt along centerlines of framing members. Minimum plywood dimension for shearwall shall be 12".
6. Nails shall be located at least 3/8" from all panel edges.
7. The use of pneumatic nail guns for shear wall nailing is subject to continued satisfactory jobsite performance and subject to the review and approval by the Engineer of Record and/or Building Inspector. If the nail heads penetrate the outer ply more than would be normal for a hand held hammer, or if the minimum edge distances are not maintained, the performance will be deemed as unsatisfactory and the continued use of pneumatic nail for shear wall nailing will not be permitted.
8. At all bearing walls (both exterior and interior walls) not noted as shear walls, continuous full depth blocking shall be provided between joists and rafters with LTP4 or A35 to top plates @ 32" oc at floors and 48" oc at roofs, unless noted otherwise per plan.
9. Refer to material specifications for additional framing requirements.

SHEAR WALL LEGEND

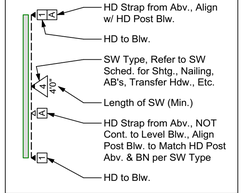

Refer to Plans for Specific Transfer & Connection Detail at each Shear Wall Location

10 TYPICAL SHEAR WALL INTERSECTIONS

"T" INTERSECTION TYPICAL OR WITH HD

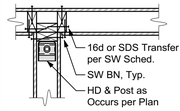

"T" INTERSECTION, HD STRAP

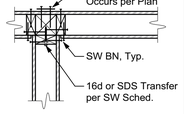

"L" INTERSECTION, 2x4 WALLS

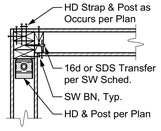

"L" INTERSECTION, 2x6 WALLS

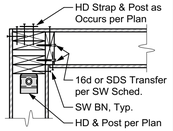

8 TYPICAL SHEAR WALL FRAMING

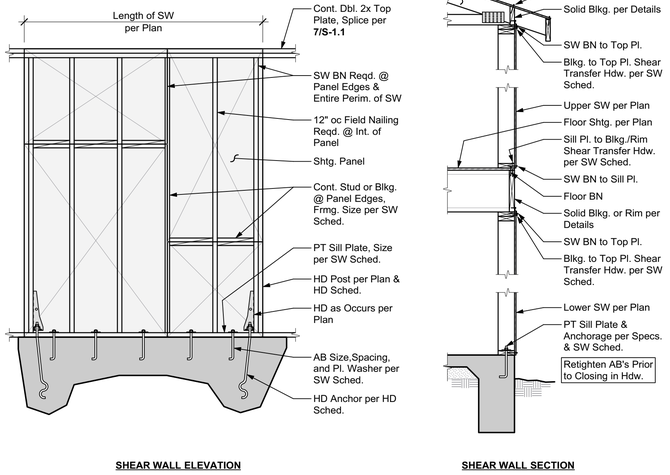

3 TYPICAL WOOD FRAMED OPENING

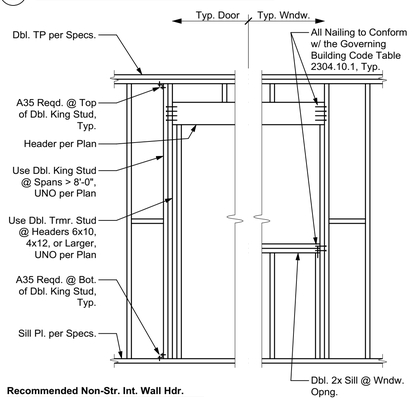

Recommended Non-Str. Int. Wall Hdr.

Span	2x4 Wall	2x6 Wall
< 4'-0"	Dbl. 2x4 Flat	Dbl. 2x6 Flat
< 6'-0"	4x4	4x6 Flat
< 8'-0"	4x6	6x6
> 8'-0"	Span in Feet Equals Beam Depth in Inches	

ABBREVIATIONS

AB	Anchor Bolt	Mas.	Masonry
A&B	Above and Below	Max.	Maximum
Abv.	Above	MB	Machine Bolt
Adn.	Addition (al)	MF	Moment Frame
Adj.	Adjacent,Adjustable	Mfr.	Manufacture(r)
Alt.	Alternate (ive)	Min.	Minimum, Minute
Appd.	Approved	Mod.	Modif(y), (ication)
Arch.	Architect(ural)	Mtl.	Metal
Avg.	Average	(N)	New
Bdry.	Boundary	N/A	Not Applicable
Bldg.	Building	Nat.	Natural
Blk(g).	Block (ing)	NTS	Not to Scale
Bm.	Beam	o/	Over
BN	Boundary Nailing	oc	On Center
B-O	Bottom of	OD	Outside Diameter
BO	By Others	Opng.	Opening
Bot.	Bottom	Opp.	Opposite
Brg.	Bearing	Opt.	Optional
Btwn.	Between	Para.	Parallel
BW	Both Ways	PCF	Lbs per Cubic Ft.
Cant.	Cantilever(ed)	Pen.	Penetrate, (tion)
CIP	Cast in Place	Perf.	Perforated
CJ	Ceiling Joist	Perim.	Perimeter
CJP	Complete Joint Penetration	Perp.	Perpendicular
		Pl	Panel Index
CL	Center Line	PJP	Partial Joint Pen.
Clg.	Ceiling	PL	Plate
CMU	Conc. Masonry Unit	PLF	Lbs per Linear Ft.
Col.	Column	Pl.	Plate
Com.	Common	Ply.	Plywood
Comp.	Component	Prep.	Prepare, (ation)
Conc.	Concrete	Press.	Pressure
Conn.	Connection	Proj.	Project
Const.	Construction	Prop.	Property
Cont.	Continue (ous)	PSF	Lbs per Square Ft.
Ctr.	Center	PSI	Lbs per Square In.
d	Penny	PT	Pressure-Treated
Dbl.	Double	PV	Photovoltaic (Solar Panels)
Defl.	Deflection		
Deg.	Degree	R	Radius
Demo.	Demolish(tion)	Rec(s).	Recommendation(s)
Dep.	Depress(ed)	Rect.	Rectangular
DF	Douglas Fir	Ref.	Reference
Dia.	Diameter	Reinf.	Reinforce(d), (ment),(ing)
Diaph.	Diaphragm		
Dif.	Different	Req(d).	Require(d)
Dim.	Dimension	Reqs.	Requirements
Dist.	Distance	Ret.	Retain(ing)
DJ	Deck Joist	RJ	Roof Joist
DL	Dead Load	RR	Roof Rafter
Dwg.	Drawing	RW	Redwood
(E)	Existing	SAD	See Arch Dwg's
Ea.	Each	Sched.	Schedule
EF	Each Face	Sgl.	Single
EFP	Equivalent Fluid Pressure	Shtg.	Sheathing
		Sim.	Similar
Elev.	Elevator, Elevation	SIP	Str. Insulated Panel
Embed.	Embed(ed), (ment)	SM	Sheet Metal
Engr.	Engineer	SMS	Sheet Metal Screw
EOR	Engineer of Record	SOG	Slab on Grade
Eq.	Equal, Equivalent	Spec.	Specif(ied),(cations)
ES	Each Side	Sq.	Square
EW	Each Way	SS	Structural Steel
Exp.	Expand, Expansion	Std.	Standard
Ext.	Exterior	Stgr.	Stagger(ed)
Fdn.	Foundation	Stl.	Steel
FF	Finished Floor	Struc.	Structure, (al)
FJ	Floor Joist	SW	Shear Wall
Flr(g).	Floor (ing)	Sym.	Symmet(ry), (rical)
FOC	Face of Concrete	T&B	Top and Bottom
FOM	Face of Masonry	T&G	Tongue and Groove
FOS	Face of Studs	Temp.	Temporary
FOW	Face of Wall	Thk.	Thick(ness)
Frmg.	Framing	Thru	Through
Ft.	Foot, Feet	TN	Toe-Nail
Ftg.	Footing	TP	Top Plate
Ga.	Gage, Gauge	T-O	Top of
Galv.	Galvanized	TOB	Top of Beam
GB	Grade Beam	TOC	Top of Concrete
GC	General Contractor	TOG	Top of Grade
Gyp.	Gypsum	TOM	Top of Masonry
HD	Holdown	TOS	Top of Steel
Hdr.	Header	TOW	Top of Wall
Hdw.	Hardware	TRU	To Remain Unchanged
Hgr.	Hanger		
Hor(iz).	Horizontal	Trmr.	Trimmer Stud
Ht.	Height	Typ.	Typical
ID	Inside Diameter	UNO	Unless Noted Otherwise
In.	Inch(es)		
Insp.	Inspect(ion)	Vert.	Vertical
Int.	Interior	VIF	Verify in Field
Inv.	Invert, Inverted	VWA	Verify with Arch
Jst.	Joist	w/	With
K	Kips (1,000 pounds)	w/n	Within
KLF	Kips per Linear Ft.	w/o	Without
King	King Stud	WS	Wood Screw
KP	King Post	Wndw.	Window
KSF	Kips per Square Ft.	Wt.	Weight
KSI	Kips per Square In.	WWF	Welded Wire Fabric
Lb(s).	Pound(s)	Yd.	Yard
LL	Live Load		
Loc.	Location	@	At
LW	Light Weight	°	Degrees
		Ø	Diameter
		>	Greater Than
		<	Less Than
		#	Number, Pound(s)
		/	Per
		%	Percent(age)
		±	Plus or Minus

PROJECT INFORMATION

CLIENT:
Kiel Kellow
310 E. Micheltorena St.,
Santa Barbara, CA 93101

ARCHITECT / DESIGNER:
Amanda Arnesson
77 Alder Avenue
San Anselmo, CA 94960
(415) 260-9185

SOILS/GEO. ENGINEER:
Earth Systems Pacific
4378 Santa Fe Road
San Luis Obispo, CA 93401
(805) 544-3276

DESIGN PARAMETERS

GENERAL PARAMETERS

Building Code	2019 CBC *
Roof Loads	
Dead Loads** (DL)	15 psf
**Includes 3 psf PV Loads	
Live Loads (LL)	20 psf
Floor Loads - Typ.	
Dead Loads (DL)	16 psf
Live Loads (LL)	40 psf
Floor Loads - Deck	
Dead Loads (DL)	13 psf
Live Loads (LL)	60 psf

SOILS VALUES (Per Soils Report)

Bearing Pressure	2300 psf

WIND DESIGN BASIS

Ultimate Wind Speed, V_{ULT}	92 mph
Nominal Wind Speed, V_{ASD}	71 mph
Risk Category	II
Exposure	B
Importance Factor, I_w	1.00

SEISMIC DESIGN BASIS

Seismic Design Category	E
Site Class	C
Seismic Factors	
S_S / S_1	1.397 / 0.485
S_{DS} / S_{D1}	1.118 / 0.485
Risk Category	II
Importance Factor, I_e	1.00
Resisting System:	Wood Shear Walls
Response Mod. Coefficient, R	6.5
Design Base Shear	V = 0.172W
Analysis Procedure:	Eqv. Lateral Force (ASCE 7-16, T. 12.6-1)

* The 2019 California Building Code (CBC), based on the 2018 International Building Code (IBC), is the governing code in the State of California.

SHEET INDEX

S-1.1	Structural Title Sheet
S-1.2	Structural Specifications & Special Inspections
S-2.1	Foundation Plan
S-2.2	Floor Framing Plan
S-2.3	Roof Framing Plan
S-3.1	Structural Details
S-3.2	Structural Details

Ashley&Vance ENGINEERING, INC.
210 East Cota Street
Santa Barbara, CA 93101
(805) 962-9966
www.ashleyvance.com
CIVIL • STRUCTURAL

The use of these plans and specifications shall be restricted to the original site for which they were prepared and publication thereof is expressly limited to such use. Reproduction or publication by any method, in whole or in part, is prohibited. Title to these plans and specifications remain with Ashley & Vance Engineering, Inc. without prejudice. Visual contact with these plans and specifications shall constitute prima facie evidence of the acceptance of these restrictions.

Engineer of Record:

PLAN REVIEW SET
NOT FOR CONSTRUCTION

Kellow Addition
310 E. Micheltorena St.,
Santa Barbara, CA 93101

Revision:

Proj. Engr.:	R. Stier — Phone Ext.: 147
Proj. Mngr.:	T. Vance — Phone Ext.: 112
Date:	25 Oct. 2021 — Scale: NTS
A&V Job No.:	21810

STRUCTURAL TITLE SHEET

S-1.1

DO NOT SCALE THESE DRAWINGS. Refer to Architectural plans for all dimensions.

Oct 25, 2021
11:05:55 AM

STATEMENT OF SPECIAL INSPECTIONS, 2019 CBC

1. This Statement of Special Inspection is submitted in fulfillment of the requirements of the Governing Building Code, section 1704 and 1705.
2. Special Inspections and Testings will be preformed in accordance with the approved plans and specifications, this statement and the Governing Building Code, Section 1704 , 1705 , 1707 , and 1708.
3. The schedule of Special Inspections summarizes the Special Inspections and tests required. Special Inspectors will refer to the approved plans and specifications for detailed special inspection requirements. Any additional tests and inspections required by the approved plans and specifications will also be performed.
4. Interim reports will be submitted to the Building Official and the Registered Design Professional in Responsible Charge in accordance with the Governing Building Code Section 1704.2.4.
5. A Final Report of Special Inspections documenting required Special Inspections, testing and correction of any discrepancies noted in the inspections shall be submitted prior to issuance of a Certificate of Use and Occupancy (Section 1704.2.4). The Final Report will document:
   (a) Required special inspections.
   (b) Correction of discrepancies noted in inspections.
6. The Owner recognizes his or her obligation to ensure that the construction complies with the approved permit documents and to implement this program of special inspections. In partial fulfillment of these obligations, the Owner will retain and directly pay for the Special Inspections as required in the Governing Building Code, Section 1704.2.
7. 1704.4 Contractor responsibility. Each contractor responsible for the construction of a main wind- or seismic force-resisting system, designated seismic system or a wind- or seismic force-resisting component listed in the statement of special inspections shall submit a written statement of responsibility to the building official and the owner or the owner's authorized agent prior to the commencement of work on the system or component. The contractor's statement of responsibility shall contain acknowledgement of awareness of the special requirements contained in the statement of special inspection.

SCHEDULE OF TESTING AGENCIES & SPECIAL INSPECTORS

The following are the testing agencies and special inspectors that will be retained to conduct tests and inspection on this project.

Responsibility	Firm	Address, Telephone, Email
1. Special Inspection (Except for Geotechnical)		
2. Materials Testing		
3. Geotechnical Inspection		
*		
* Additional inspections may be required at the discretion of the Building Official.		

SEISMIC REQUIREMENTS (Section 1705.12)
Description of seismic-force-resisting system and designated seismic systems subject to special inspections per Section 1705.12:
Light-framed walls sheathed with wood structural panels rated for shear resistance or steel sheets (ASCE 7, Table 12.2-1, Line A.15)
The extent of the main seismic-force-resisting system is defined in more detail in the construction documents.

WIND REQUIREMENTS (Section 1705.11)
Description of main wind-force-resisting system and designated seismic systems subject to special inspections per Section 1705.11:
Not Applicable
The extent of the main wind-force-resisting system is defined in more detail in the construction documents.

SCHEDULE OF SPECIAL INSPECTIONS

Column Header Notation Used in Table:
- C Indicates continuous inspection is required.
- P Indicates periodic inspections are required. The notes and/or contract documents should clarify.

Box Entry Notation Used in Table:
- X Is placed in the appropriate column to denote either "C" continuous or "P" periodic inspections.
- -- Denotes a one-time activitiy or one whose frequency is defined in some other manner.

Additional details regarding inspections are provided in the project specifications or notes on the drawings.

Verification & Inspection	C	P	Notes
1705.6 - Soils			
1. Verify materials below shallow footings are adequate to achieve the desired bearing capacity		X	
2. Verify excavations are extended to proper depth and have reached proper material		X	
3. Perform classification and testing of compacted fill materials		X	
4. Verify use of proper materials, densities, and lift thicknesses during placement and compaction of compacted fill	X		
5. Prior to placement of compacted fill, inspect subgrade and verify that site has been prepared properly		X	
1705.12.2 - Seismic Resistance - Structural Wood			
1. Inspect field gluing operations of elements of the main seismic force-resisting system	X		
2. Inspect nailing, bolting, anchoring, and other fastening of elements of the main seismic force-resisting system, including wood shear walls, wood diaphragms, collectors (drag struts), braces, shear panels, and hold-downs		X	Inspection of shear walls and diaphragms with fasteners spaced greater than 4" oc is not required

Oct 25, 2021 11:02:57 AM

GENERAL NOTES

1. The following notes, details, schedules & specifications shall apply to all phases of this project unless specifically noted otherwise. Notes and details on the structural plans shall take precedence over general notes and typical details. Where no details are given, construction shall be as shown for similar work.
2. All drawings are considered to be part of the contract documents. The Contractor shall be responsible for the review and coordination of all drawings and specifications prior to the start of construction. Any discrepancies shall be brought to the attention of the Engineer prior to the start of construction so that a clarification can be issued. Any work performed in conflict with the contract documents or any applicable code requirements shall be corrected by the Contractor at no expense to the Owner or Engineer.
3. All information on existing conditions shown on the structural plans are based on best present knowledge available, but without guarantee of accuracy. The Contractor shall be responsible for the verifications of all dimension and conditions at the site. Any discrepancies between actual site conditions and information shown on the drawings or in the specifications shall be brought to the attention of the EOR prior to the start of construction.
4. Refer to the Architectural plans for the following:
   (a) Dimensions
   (b) Size and location of all interior and exterior wall locations.
   (c) Size and location of all floor, roof and wall openings
   (d) Size and location of all drains, slopes, depressions, steps, etc.
   (e) Specification of all finishes & waterproofing
   (f) All other non-structural elements
5. Refer to the mechanical, electrical and plumbing plans for the following:
   (a) Size and location of all equipment
   (b) Pipe runs, sleeves, hangers and trenches
   (c) All other mechanical, electrical or plumbing related elements
6. **DO NOT** scale structural plans. Contractor shall use all written dimensions on Architectural plans.
7. Construction materials shall be uniformly spread out if placed on floor or roof so as to not overload the framing. Load shall not exceed the design live load per square foot. It is the Contractor's responsibility to provide adequate shoring and/or bracing as required.
8. Specifications and detailing of all waterproofing and drainage items, while sometimes shown on the structural plans for general information purposes only, are solely the design responsibility of others.
9. The Engineer will not be responsible for and will not have control or charge of construction means, methods, techniques, sequences or procedures, or for safety precautions and programs in connection with the construction delineated by these plans. It should be understood that the Contractor or his/her agent(s) shall supervise and direct all work and shall be solely and completely responsible for all construction means, methods, techniques, sequences, procedures and conditions on the job site, including safety of all persons and property during the entire period of construction. Periodic observations by the Engineer, his staff or representatives are not intended to include verification of dimensions or review the adequacy of the Contractor's safety measures on or near the construction site.
10. Modifications of the plans, notes, details and specifications shall not be permitted without prior approval from the Engineer.
11. All workmanship shall conform to the best practice prevailing in the various trades performing the work. The Contractor shall be responsible for coordinating the work of all trades.
12. It is the Contractor's responsibility to ensure that only approved structural plans are used during the course of construction. The use of unapproved documents shall be at the contractor's own risk. Corrections of all work based on such documents shall be performed at the Contractor's expense.
13. These plans and specifications represent the structural design only. No information nor warranty is provided for the work of any other Consultant (Architect, Mechanical, Electrical, etc.). This includes, but is not limited to, waterproofing, drainage, ventilation, accessibility, or dimensions.

FOUNDATIONS

1. Refer to Structural Design Parameters section on sheet S-1.1 for all soil design values used in calculations.
2. Soils values per geologic/geotechnical report (or "soils report") by Earth Systems Pacific, Inc., Project No. 304581-001, dated June 30, 2021. This report and all recommendations contained therein are to be considered a part of these plans.
3. It is the Contractor's responsibility to obtain a copy of the soils report from the Owner. A copy of the soils report shall be on the job site during the course of construction.
4. Unexpected Soil Conditions: Allowable values and subsequent foundation designs are based on soil conditions which are shown by test borings. Actual soil conditions which deviate appreciably from that shown in the test borings shall be reported to the EOR and/or soils engineer immediately.
5. All compaction, fill, backfilling and site preparation shall be performed in accordance with project soils report or the Governing Building Code Chapter 18 & Appendix J. All such work shall be performed per the recommendations of the project soils engineer.
6. Excavate to required depths and dimensions (as indicated in the drawings), cut square and smooth with firm level bottoms. Care shall be taken not to over-excavate foundation at lower elevation and prevent disturbance of soils around high elevation.
7. Foundations shall be poured in neat excavations.
8. Excavate all foundations to required depths into compacted fill or natural soil (as per plans and details) and as verified by the building official and/or soils engineer.
9. All foundations shall be inspected and approved by the appropriate building official and/or a representative of the soils engineer prior to forming and placement of reinforcing or concrete.
10. Foundations shall not be poured until all required reinforcing steel, framing hardware, sleeves, inserts, conduits, pipes, etc. and formwork is properly placed and inspected by the appropriate building official/inspector(s).
11. It is the responsibility of the contractor in charge of framing to properly position all holdown bolts, anchor bolts, column bases, and all other cast-in-place hardware. Refer to typical details. All hardware to be secured prior to foundation inspections.
12. The sides and bottoms of dry excavations must be moistened to optimum moisture content or just above, just prior to placing concrete. Conversely, de-water footings as required to remove standing water and to maintain optimum working conditions.
13. The Contractor shall be solely responsible for all excavation procedures including lagging, shoring, and the protection of adjacent property, structures, streets, and utilities in accordance with all federal, state and local safety ordinances. The Contractor shall provide for the design and installation of all cribbing, bracing and shoring required.

ROD AND REBAR EPOXY INSTALLATION

1. Special inspection is required, unless specifically noted otherwise. Special inspection services shall conform to the Governing Building Code, Chapter 17 and shall be provided by an ICC certified inspector or Building Department approved engineer. The Building Department reserves the right to waive or require the special inspection requirements [Governing Building Code sections 1704.1 & 1704.4]. Nothing in these plans waives the Building Department's right to require special inspection at any point and on any material.
2. Epoxy for anchoring bolts, rods, and reinforcing bars shall be as follows:
   (a) Concrete: Hilti HIT RE 500 v3 (ICC ESR-3814), Hilti HY 200 (ICC ESR-3187), or Simpson SET-3G (ICC ESR-4057).
   (b) Full Grouted Masonry: Hilti HY 200 (ICC ESR-3187), or Hilti HY 270 (ICC 2682), or Simpson SET-3G (ICC ESR-4057).
   (c) Hollow Cell Masonry Units and Unreinforced Masonry: Hilti HY 270 (ICC 2682), or Simpson ET-HP (ICC ESR 3372).
3. Anchors shall be installed in accordance with the manufacturer's printed installation instructions by qualified personnel trained to install epoxy anchors.
4. Holes for post-installed anchors shall be drilled with a carbide tipped concrete/masonry drill bit using an electro-pneumatic hammer drill bit set in "rotation and hammer" mode. Hole diameter shall be 1/8" larger than the anchor diameter specified, unless noted otherwise. For installation in brick or hollow cell masonry units with a screen tube, the hole diameter shall be 1/4" larger than the anchor diameter, unless noted otherwise.
5. DO NOT drill through existing reinforcing. A small diameter test hole shall be drilled at the installation location. If existing reinforcing is encountered, the installation location shall be relocated to avoid conflict and the abandoned hole shall be filled with non-shrink grout or drypack. For holes drilled into columns and beams, remove the rebar cover in order to positively identify the rebar location such that the holes avoid the rebar. Other non-destructive means may be used to identify the positions and depth of reinforcing.
6. Holes shall be cleaned of dust and debris by blowing with 90 psi oil-free compressed air, brushing with a wire brush two times, and blowing with compressed air again to achieve a relatively dust-free wall surface.
7. The base material shall be a minimum of 28 days old, within a temperature range of 50ºF - 100ºF, and dry at the time of epoxy installation. The base material shall have a minimum strength as follows:
   (a) Concrete: 2,500 psi
   (b) Full Grouted Masonry: 1,500 psi
8. Fill each hole 1/2 - 2/3 full with epoxy, starting from the bottom of the hole to prevent air pockets. Withdraw the nozzle as the hole fills up with epoxy. Insert clean, oil-free anchor, turning slowly until the anchor contacts the bottom of the hole. DO NOT disturb anchor until fully cured. Cure time shall be per the manufacturer's installation instructions.

CONCRETE

1. All concrete shall have:
   (a) an ultimate compressive strength (f'c) of 2,500 psi at 28 days (UNO).
   (b) a maximum slump of 5" at point of placement.
   (c) a W/C ratio of 0.55 or less for all slabs, walls, and columns, and 0.60 or less for all foundations.
   (d) a normal dry-weight density (UNO).
2. Special inspection is NOT required as the foundations have been *designed* with f'c = 2,500 psi in accordance with the Governing Building Code, section 1705.3, exceptions 1, 2.1, and 2.3, unless explicitly specified herein, on the structural plans, or by the Building Department. As a minimum, special inspection is always required on:
   (a) structural slabs, flat plates
   (b) walls, columns, beams
   (c) piles, caissons
   (d) welding of reinforcement, installation of mechanical bar splice devices, epoxy application

   When required or specified, special inspection services shall conform to the Governing Building Code, Chapter 17 and shall be provided by an ICC certified inspector or Building Department approved engineer. The Building Department reserves the right to waive or require the special inspection requirements [Section 1704.1 and 1704.4] . Nothing in these plans waives the Building Department's right to require special inspection at any point and on any material.
3. Testing of materials used in concrete construction must be performed as noted on structural plans or at the request of the Building Department to determine if materials are quality specified. Tests of materials and of concrete shall be made by an approved agency and at the expense of the contractor; such tests shall be made in accordance with the standards listed in the Governing Building Code, Table 1705.3. When testing of concrete is required, four (4) test cylinders shall be taken from each 150 yards, or fraction thereof, poured in any one day. One (1) cylinder shall be tested at seven (7) days; two (2) at 28 days; one (1) shall be held in reserve. Where 4x8 cylinders are used, (5) test cylinders shall be taken, with (3) cylinders tested at 28 days. If Contractor elects to have additional tests performed for "early-break" results, additional test cylinders must be taken. At no time shall the Contractor instruct the testing agency to perform tests on a schedule different than above without the prior authorization of the Engineer. Contractor is responsible for complying with applicable testing requirements of theBuilding Department. Copies of all test reports shall be provided to Engineer and Building Department for review in a timely manner.
4. The Contractor shall remove and replace any concrete which fails to attain specified 28 day compressive strength if so directed by the Engineer. Any defects in the hardened concrete shall be repaired to the satisfaction of the Engineer and/or Architect or the hardened concrete shall be replaced at the Contractor's expense.
5. All concrete work shall conform with the Governing Building Code, Chapter 19.
6. All cement shall be Portland Cement Type I or II and shall conform to ASTM C 150.
7. All aggregates shall conform to ASTM C33. Maximum aggregate sizes:
   (a) Footings: 1-1/2"
   (b) All other work: 3/4"
8. Where not specifically detailed, the minimum concrete cover on reinforcing steel shall be:
   (a) Permanently exposed to earth or weather
      i. Cast against earth: 3"
      ii. Cast against forms: 2"
   (b) Not exposed to earth or weather
      i. Slabs, walls, joists: 3/4"
      ii. Beams, girders, columns: 1-1/2"
9. The minimum lap splice length for all reinforcing steel shall be as noted in the typical details on sheet S-1.1. All lap splices to be staggered.
10. All reinforcing steel, anchor bolts, dowels, inserts, and any other hardware to be cast in concrete shall be well secured in position prior to foundation inspection. All hardware to be installed in accordance with respective manufacturer's specifications. Refer to architectural and structural plans for locations of embedded items.
11. Locations of all construction joints, other than specified on the structural plans, shall be approved by the Architect and Engineer prior to forming. Construction joints shall be thoroughly air and water cleaned and heavily roughened so as to expose coarse aggregates. All surfaces to receive fresh concrete shall be maintained continuously wet at least three (3) hours in advance of concrete placement. Unless specifically detailed or otherwise noted, construction and control joints shall be provided in all concrete slabs-on-grade. Joints shall be located such that the area does not exceed 400 sq. feet.
12. The Architect, Engineer and appropriate inspectors shall be notified in a timely manner for a reinforcement inspection prior to the placement of any concrete.
13. The Contractor shall obtain approval from the Architect and the Engineer prior to placing sleeves, pipes, ducts, chases, coring and opening on or through structural concrete beams, walls, floors, and roof slabs unless specifically detailed or noted on the plans. All piles or conduits passing through concrete members shall be sleeved with standard steel pipe sections.
14. The Contractor is responsible for design, installation, maintenance and removal of all formwork. Forms shall be properly constructed, sufficiently tight to prevent leakage, sufficiently strong, and braced to maintain their shape and alignment until no longer needed for concrete support. Joints in formwork shall be tightly fitted and blocked, and shall produce a finished concrete surface that is true and free from blemishes. Forms for exposed concrete shall be pre-approved by the Architect to ensure conformance with design intent.
15. Remove form work in accordance with the following schedule:
   (a) Forms at slab edge: 1 day
   (b) Side forms at footings: 2 days
   (c) All other vertical surfaces: 7 days
   (d) Beams, columns, girders: 15 days
   (e) Elevated slabs: 28 days

   Engineer reserves the right to modify removal schedule above based on field observations, concrete conditions, and/or concrete test results.
16. Retaining walls shall not be backfilled until concrete has set a minimum of 14 days. Refer to structural plans for slab and/or framing installation sequencing.
17. All concrete (except slabs-on-grade 6" or less) shall be mechanically vibrated as it is placed. Vibrator to be operated by experienced personnel. The vibrator shall be used to consolidate the concrete. The vibrator shall not be used to convey concrete, nor shall it be placed on reinforcing and/or forms.
18. Concrete shall be maintained in a moist condition for a min. of five (5) days after placement.
19. Concrete shall not be permitted to free fall more than six (6) feet. For heights greater than six (6) feet, use tremie, pump or other method consistent with applicable standards.
20. When specified ultimate compressive strength is greater than 2500 psi, Contractor shall submit mix designs to Architect and Engineer for approval seven (7) days prior to placement. Mix designs shall be prepared by an approved testing laboratory. Sufficient data must be provided for all admixtures.
21. Refer to Architectural plans for locations of all dimensions, slab depressions, slopes, drains, curbs, and control joints.

EXPANSION ANCHORS

1. Special inspection is required, unless specifically noted otherwise. Special inspection services shall conform to the Governing Building Code, Chapter 17 and shall be provided by an ICC certified inspector or Building Department approved engineer. The Building Department reserves the right to waive or require the special inspection requirements [Governing Building Code sections 1704.1 & 1704.4]. Nothing in these plans waives the Building Department's right to require special inspection at any point and on any material.
2. Expansion anchors shall be Hilti Kwik Bolt TZ (ICC ESR 1917) or Simpson Strong-Bolt 2 (ICC ESR 3037).
3. Anchors shall be installed in accordance with the manufacturer's printed installation instructions by qualified personnel trained to install expansion anchors.
4. Anchors permanently exposed to weather or corrosive environments shall be stainless steel.
5. Holes for post-installed anchors shall be drilled with a carbide tipped concrete/masonry drill bit using an electro-pneumatic hammer drill bit set in "rotation and hammer" mode. Hole diameter shall match the nominal diameter of the anchor to be installed.
6. DO NOT drill through existing reinforcing. A small diameter test hole shall be drilled at the installation location. If existing reinforcing is encountered, the installation location shall be relocated to avoid conflict and the abandoned hole shall be filled with non-shrink grout or drypack. For holes drilled into columns and beams, remove the rebar cover in order to positively identify the rebar location such that the holes avoid the rebar. Other non-destructive means may be used to identify the positions and depth of reinforcing.
7. Holes shall be cleaned of dust and debris by blowing with oil-free compressed air.
8. The base material shall be a minimum of 28 days old and dry at the time of epoxy installation. The base material shall have a minimum strength as follows:
   (a) Concrete: 2,500 psi
   (b) Full Grouted Masonry: 1,500 psi
9. Assemble the anchor with nut and washer so the top of the nut is flush with the top of the anchor. Place the anchor in the fixture, and drive it into the hole until the washer and nut are tight against the fixture.
10. Tighten to the required installation torque per the manufacturer's installation instructions. Anchors which fail to achieve the specified installations torque shall be brought to the attention of the engineer.

ROUGH CARPENTRY

1. Refer to latest edition of the Governing Building Code, Table 2304.10.1. for all minimum nailing requirements.
2. Refer to individual sections for applicable material specifications.
3. Fabricate, size, install, connect, fasten, bore, notch, and cut wood and plywood with joints true, tight, and well-nailed, screwed or bolted as required, all members to have solid bearing without being shimmed, unless noted otherwise. Set horizontal members subject to bending with the crown up. Install framing plumb, square, true and cut for full bearing. Splices are not permitted between bearings. Use full lengths unless otherwise specified.
4. Metal framing angles, anchor, clips, straps, ties, holdowns, etc. shall be mfg by Simpson Strong-Tie Co. No substitutions shall be permitted without prior approval of the Engineer.
5. All walls are to have continuous double 2x top plates spliced as followings unless specifically noted otherwise on the plans and details.
6. Wall Studs:
   (a) Unless specifically noted on the plan and details, use the following guidelines for wall framing:
      i. Use 2x4 studs at 16" oc for walls less than 9'-0" tall.
      ii. Walls 9'-0" to 16'-0" tall shall be constructed of 2x6 studs at 16" oc
      iii. Request specifically engineered wall details for walls greater than 16'-0" tall.
7. Blocking:
   (a) Provide min. one row of nominal 2" thick blocking of same width as stud, fitted snugly and spiked into studs at mid-height of partitions or walls over 8' high.
   (b) All foundation cripple walls (or "pony walls") less than 14" in height shall be solid blocking.
   (c) Refer to shearwall section for additional blocking requirements.
8. Notching:
   (a) Is not permitted of any structural member without prior approval
   (b) In exterior and bearing walls, notches shall not exceed 25% of the stud depth.
   (c) Non-bearing partition walls, notches shall not exceed 40% of the stud depth.
   (d) Successive notches in the same member shall be spaced a min of 18" apart.
9. Boring:
   (a) Is not permitted of any structural member without prior approval
   (b) In exterior and bearing walls, holes shall not exceed 40% of the stud depth.
   (c) Non-bearing partition walls, may be drilled not greater than 60% of stud depth.
   (d) Successive holes in the same member shall be spaced a minimum of 18" apart.
10. Bearing:
   (a) Provide a min. of 1-1/2" of bearing for all 2x joists and hdrs 4x10 / 6x8 & smaller.
   (b) Provide a min. of 3" of bearing for all beams and hdrs 4x12 / 6x10 & larger, UNO on plans.
   (c) Members bearing on prefabricated hangers are to have full bearing and nailing per manufacturer's specifications.
11. Posts:
   (a) Posts inside walls shall bear on sill plates and shall be continuous between top and bottom plates, unless specifically noted otherwise.
   (b) Provide posts under all beams, girders or double joists equal to the width of the supported member.
   (c) Posts on upper levels are to be stacked on posts of equal size at levels below, unless a larger post is specified on the plans.
   (d) Vertically oriented blocking ("squash blocking") shall be used to fully transfer the post area through floors to foundation. Vertical blocking shall be equal to floor thickness plus 1/16".
   (e) Headers framing into continuous posts without trimmer studs shall be supported in Simpson HUC hangers unless noted otherwise on the plans.
   (f) Posts when isolated, shall be seated in Simpson post or column bases, unless noted otherwise on the plans
12. Roof Framing:
   (a) Provide wood joists, as specified, laid with the crown up and spaced as indicated.
   (b) Provide a minimum of 1-1/2" end bearing unless otherwise shown.
   (c) Provide full depth solid 2x blkg or cross-bridging between the joists at 8' oc max.
   (d) Provide all cricket framing required to achieve positive drainage per Arch.
   (e) Install plywood panels with the face grain across the framing and close joints and nail at each support. Fully nail with common nails per the plans.
   (f) Plywood panels shall not be less than 4' x 8' except at boundaries and changes in framing direction, where the minimum panel dimension shall be no less than 24", unless all edges of undersized panels are supported by and fastened to framing members or blocking.
   (g) Provide Simpson "PSCL" clips at all plywood joints perpendicular to framing. Provide clips midway between framing members at the unsupported edges of plywood when members are spaced at 24" oc or greater. If clips are not used, provide solid blocking for joints perpendicular to framing.
13. Floor Framing:
   (a) Provide wood joists, as specified, laid with the crown up and spaced as indicated.
   (b) Provide a minimum of 1-1/2" end bearing unless otherwise shown.
   (c) Provide full depth solid 2x blkg or cross-bridging between the joists at 8' oc max. For floors framed with I joists, refer to the mfg's spec's for blkg requirements.
   (d) Provide full depth solid 2x blocking between the joists under all walls and partitions where the wall or partition is perpendicular to the floor framing (including floors framed with I joists)
   (e) Install plywood sheathing with the face grain across supports, end supports staggered, and the edges of sheets centered over supports. If T&G plywood is used, blocking need not be provided at all plywood edges (UNO per plan). If T&G plywood is not used, blocking shall be provided at all plywood edges. Glue plywood to joists and fully nail with common nails per the plans.
   (f) Plywood panels shall not be less than 4' x 8' except at boundaries and changes in framing direction, where the minimum panel dimension shall be no less than 24", unless all edges of undersized panels are supported by and fastened to framing members or blocking.
14. Shear Walls:
   (a) Refer to plans for all shearwall locations, length type and nailing.
   (b) Refer to Shearwall Schedule on title sheet for additional information.
   (c) Shear wall lengths specified on plans are minimum required.
   (d) Shear walls to be nailed with common nails. All nails to have minimum 3/8" edge distance to panel or framing member.
   (e) Where 3x framing is required per the shear wall schedule, stagger edge nailing.
   (f) Oriented Strand Board (OSB) may be used in lieu of plywood.

TIMBER / LUMBER

1. All structural lumber shall be Douglas Fir-Larch, S4S and shall conform to the Governing Building Code, section 2303.1.1.
2. The minimum lumber grade of each member shall be as follows (unless specifically noted otherwise on plans and details) :
   (a) 2x studs, blocking, plates:Stud
   (b) 2x joists #2 or better
   (c) 4x4, 4x6, or 6x6 beams or posts #2 or better
   (d) 4x8, 6x8, or larger beams or posts #1 or better

   It is recommended (but not required) that all exposed members be Select Structural or better and free of heart center due to visual characteristics.
3. All lumber in contact with concrete or masonry shall be pressure treated Douglas Fir. Whenever it is necessary to cut, notch, bore or splice pressure treated material, all newly cut surfaces shall be thoroughly painted with the same preservative.
4. Maximum moisture content for all structural members shall not exceed 19%.
5. All plywood sheathing shall be CDX grade (or better) Douglas Fir with exterior glue. All sheathing shall conform to the Governing Building Code and grade-marked by the American Plywood Association (APA). Panel index to be 40/20 for floors and 24/0 for roofs unless specifically noted otherwise on the plans and details.

REINFORCEMENT

1. Reinforcing steel shall be deformed, clean, free of rust, grease or any other material likely to impair concrete bond.
2. All bars shall conform to ASTM A615, Grade 60 minimum (UNO on structural plans). All weld wire fabric (WWF) shall conform to ASTM A185.
3. Reinforcing steel that is to be welded shall conform to ASTM A706. All welding of reinforcement shall be subject to special inspection.
4. Contractor shall take necessary steps (standard ties, anchorage devices, etc.) to secure all reinforcing steel in their true position and prevent displacement during concrete placement.
5. Fabrication, placement and installation of reinforcing steel shall conform to:
   (a) Concrete Reinforcing Steel Institute (CRSI) Manual of Standard Practice
   (b) the Governing Building Code.
6. Shop drawings for fabrication of reinforcing steel shall be approved by the Contractor and submitted to the Architect and Engineer for review and approval prior to fabrication. Shop drawings are not required for slabs-on-grade or foundations unless specifically noted on the structural plans.
7. Heating of reinforcing steel to aid in bending and shaping of bars is not permitted. All bends in reinforcing steel are to be made cold. All bend radii shall conform to CRSI Manual of Standard Practice.
8. Refer to Concrete and Masonry notes for specific minimum splice length and splice staggering requirements. Lap welded wire fabric (WWF) reinforcement two (2) modules minimum (UNO). All splices are to be staggered.

ENGINEERED LUMBER

1. Glu-laminated Beams (GLB):
   (a) shall have the following properties:

Use	EWS Combination Symbol	Species / Grade	Flexural Stress, Fb (psi)	Modulus of Elasticity, E (ksi)	Horiz. Shear Stress, Fv (psi)	Compression	
						Fc para. (psi)	Fc perp. (psi)
Simple Span Bm.	24F-V4	DF	+2,400/-1,850	1,800	265	1,650	650
Continuous or Cantilever Bm.	24F-V8	DF	+/- 2,400	1,800	265	1,650	650
Columns	2	DF / L2	+/- 1,800	1,600	265	1,650	650

   (b) shall not be notched, cut or drilled without prior approval from the Engineer
   (c) shall have exterior glue and weather-treatment prior to installation
   (d) shall be fabricated by an approved manufacturer & in accordance with ANSI A 190.1
   (e) shall have factory standard camber of 3,500-5,000 ft on beams UNO per Plan
2. Laminated Veneer Lumber (LVL) :
   (a) shall be 1-3/4" minimum thickness with the following minimum properties:
      i. E = 2000 ksi
      ii. Fb = 2600 psi
      iii. Fv = 285 psi
      iv. Fc (parallel) = 2500 psi
      v. Fc (perp.) = 750 psi
      vi. Ft (parallel) = 1500 psi
      vii. Specific Gravity = 0.50
   (b) shall be fabricated by an approved manufacturer
   (c) shall bear a minimum of 3-1/2" on specified supports. Provide full depth solid blocking at all bearing points
   (d) shall be nailed in accordance with mfg's specifications. Unless otherwise approved, nailing into the top edge shall not be spaced any closer than:
      i. 16d @ 6" oc, 10d @ 4" oc, and 8d @ 3" oc
      ii. When nailing must be reduced, stagger rows a minimum of 1/2" apart while maintaining proper edge distances.
   (e) shall be, when comprised of multiple members, connected with 16d nail, 1/2" bolts or 1/4" lag screws in accordance with manufacturer's specifications.
   (f) shall not be cut, notched or drilled without specific written approval of the EOR.
3. Laminated Strand Lumber (LSL) :
   (a) shall be 1-1/4" minimum thickness with the following minimum properties:
      i. E = 1550 ksi
      ii. Fb = 2325 psi
      iii. Fv = 310 psi
      iv. Fc (parallel) = 2500 psi
      v. Fc (perp.) = 800 psi
      vi. Ft (parallel) = 1070 psi
      vii. Specific Gravity = 0.50
   (b) shall be fabricated by an approved manufacturer
   (c) shall bear a minimum of 3-1/2" on specified supports. Provide full depth solid blocking at all bearing points
   (d) shall be nailed in accordance with mfg's specifications. Unless otherwise approved, nailing into the top edge shall not be spaced any closer than:
      i. 16d @ 6" oc, 10d @ 4" oc, and 8d @ 3" oc
      ii. When nailing must be reduced, stagger rows a minimum of 1/2" apart while maintaining proper edge distances.
   (e) shall be, when comprised of multiple members, connected with 16d nail, 1/2" bolts or 1/4" lag screws in accordance with manufacturer's specifications.
   (f) shall not be cut, notched or drilled without specific written approval of the EOR.
4. Parallel Strand Lumber (PSL) :
   (a) shall be 2-1/2" minimum thickness with the following minimum properties:
      i. E = 2200 ksi
      ii. Fb = 2900 psi
      iii. Fv = 290 psi
      iv. Fc (parallel) = 2900 psi
      v. Fc (perp.) = 750 psi
      vi. Ft (parallel) = 2025 psi
      vii. Specific Gravity = 0.50
   (b) shall be fabricated by an approved manufacturer
   (c) shall bear a minimum of 3-1/2" on specified supports. Provide full depth solid blocking at all bearing points
   (d) shall be nailed in accordance with manufacturer's specifications. Unless otherwise approved, nailing shall not be spaced any closer than:
      i. Narrow face: 16d @ 6" oc, 10d @ 4" oc, and 8d @ 3" oc
      ii. Wide Face: 16d @ 8" oc, and 10d & 8d @ 6" oc
      iii. When nailing must be reduced, stagger rows a minimum of 1/2" apart while maintaining proper edge distances
   (e) shall not be cut, notched or drilled without specific written approval of the EOR.
5. Plywood I Joists:
   (a) type and manufacturer shall be clearly noted on the plans. Substitutions shall not be permitted without prior approval of the Engineer.
   (b) shall be installed in accordance with applicable code approvals and mfg's spec's.
   (c) shall bear a minimum of 1-3/4" at all end supports, and 3-1/2" at intermediate supports. Provide full depth solid blocking at all bearing points.
   (d) shall be installed with intermediate blocking or bridging as specified by the Mfr. Only omit intermediate blocking when specifically allowed by the Mfr.
   (e) shall not be cut, notched or drilled without specific written approval of the EOR.

FASTENERS

1. Nails:
   (a) shall be with "common" nails unless noted otherwise.
   (b) shall not be driven closer than 1/2 their length nor closer than 1/4 of their length to the edge or end of a member, except for sheathing.
   (c) shall be installed in pre-drilled lead holes if necessary to avoid splitting.
   (d) shall be hot-dipped zinc-coated galvanized steel, stainless steel, silicon bronze, or copper when in contact with preservative-treated wood.
      i. When used in exterior applications, nails shall have coating types and weights in accordance with the treated wood or bolt manufacturer's Recs. A Min. of ASTM A653, type G185 zinc-coated galvanized steel (or equiv.) shall be used.
      ii. When used in an interior, dry environment in SBX/DOT or zinc borate preservative-treated wood, plain carbon nails shall be permitted.
   (e) All nailing shall conform to the Governing Building Code, Table 2304.10.1.
2. Lag screws:
   (a) shall be installed into pre-drilled lead holes. Lubricant (or soap) shall be used to facilitate installation and prevent damage to the screws.
   (b) shall be hot-dipped zinc-coated galvanized steel or stainless steel when in contact with preservative-treated wood.
      i. When used in exterior applications, bolts shall have coating types and weights in accordance with the treated wood or bolt manufacturer's rec's. A minimum of ASTM A653, type G185 zinc-coated galvanized steel (or equal) shall be used.
      ii. When used in dry interior environments in SBX/DOT or zinc borate preservative-treated wood, plain carbon screws, nuts, and washers shall be permitted.
3. Bolts:
   (a) shall conform to ASTM A307, UNO specifically on plans and details.
   (b) shall be installed in pre-drilled holes a max of 1/16" larger than the specified bolt dia.
   (c) when installed against wood surfaces, shall have standard washers under the heads and nuts.
   (d) shall be hot-dipped zinc-coated galvanized steel or stainless steel when in contact with preservative-treated wood.
      i. When used in exterior applications, bolts shall have coating types and weights in accordance with the treated wood or bolt manufacturer's rec's. A minimum of ASTM A653, type G185 zinc-coated galvanized steel (or equal) shall be used.
      ii. When used in dry interior environments in SBX/DOT or zinc borate preservative-treated wood, plain carbon screws, nuts, and washers shall be permitted.
4. Anchor Bolts:
   (a) shall be installed at all exterior walls and all interior shear and/or bearing walls.
   (b) shall be 5/8" diameter with 3x3x0.229" steel plate washers at shearwalls.
   (c) shall be 5/8" diameter with 2x2x3/16" steel plate washers at non-shearwalls.
   (d) shall have 7" minimum embedment. (Contractor to coordinate length of bolts with sill plate thicknesses).
   (e) shall conform to ASTM F1554, Grade 36.
   (f) shall be hot-dipped zinc-coated galvanized steel or stainless steel when in contact with preservative-treated wood.
      i. When used in exterior applications, bolts shall have coating types and weights in accordance with the treated wood or bolt manufacturer's rec's. A minimum of ASTM A653, type G185 zinc-coated galvanized steel (or equal) shall be used.
      ii. When used in dry interior environments in SBX/DOT or zinc borate preservative-treated wood, plain carbon screws, nuts, and washers shall be permitted.
   (g) shall not be spaced greater than 72" oc Refer to shearwall schedule for specific anchor bolt spacing requirements.
   (h) shall be placed a maximum of 12" from wall corners, wall ends, and sill plate splices (but not less than 7 dia.) , and a min. of two bolts per piece of sill plate is required.
   (i) shall be secured in place prior to foundation inspection.
5. Powder Actuated Shot Pins:
   (a) shall be installed at all interior non-bearing, non-shearwalls.
   (b) shall be 0.145x3" with 1.5" diameter steel washers.
   (c) shall not be spaced greater than 32" o.c.

Ashley&Vance
ENGINEERING, INC.
210 East Cota Street
Santa Barbara, CA 93101
(805) 962-9966
www.ashleyvance.com
CIVIL • STRUCTURAL

The use of these plans and specifications shall be restricted to the original site for which they were prepared and publication thereof is expressly limited to such use. Reproduction or publication by any method, in whole or in part, is prohibited. Title to these plans and specifications remain with Ashley & Vance Engineering, Inc. without prejudice. Visual contact with these plans and specifications shall constitute prima facie evidence of the acceptance of these restrictions.

Engineer of Record:

REGISTERED PROFESSIONAL ENGINEER R. PAUL BE... CIVIL STATE OF CALIFORNIA

COORDINATION SET
NOT FOR BIDDING OR CONSTRUCTION

PLAN REVIEW SET
NOT FOR CONSTRUCTION

Kellow Addition

310 E. Micheltorena St.,
Santa Barbara, CA 93101

Revision:

Proj. Engr.: R. Stier	Phone Ext.: 147
Proj. Mngr.: T. Vance	Phone Ext.: 112
Date: 25 Oct. 2021	Scale: NTS
A&V Job No.: 21810	

STRUCTURAL SPECIFICATIONS

S-1.2

DO NOT SCALE THESE DRAWINGS. Refer to Architectural plans for all dimensions.

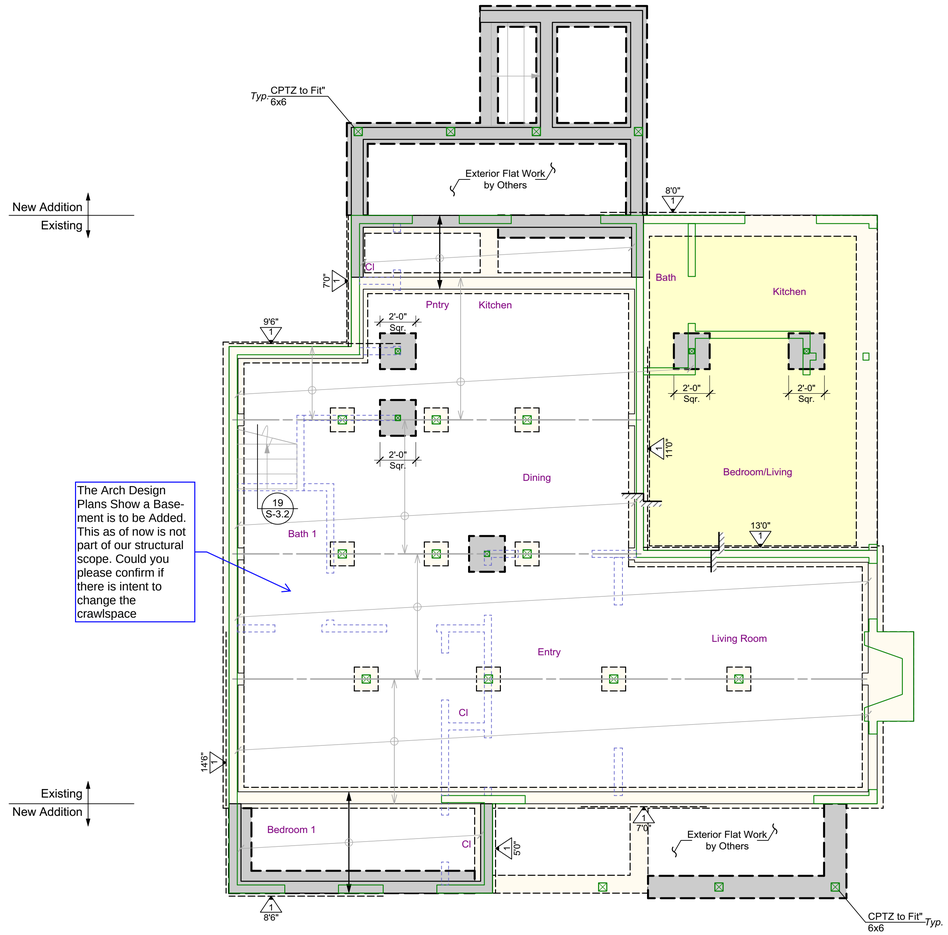

The Arch Design Plans Show a Basement is to be Added. This as of now is not part of our structural scope. Could you please confirm if there is intent to change the crawlspace

GENERAL FRAMING NOTES

(N) Beams (per Call-out)

(E) Beams (per Call-out)

All Lumber 4x6, 6x6 and Smaller to be DF #2 UNO
All Lumber 4x8, 6x8 and Larger to be DF #1 UNO

All Beams to Bear on Plates w/ Indicated Post or Doubler Below UNO

All Hangers Shall be Installed w/ Max. Nailing per Mfr. & Sized for Full Width & Depth of Supported Members, UNO

Floor sheathing to be 3/4" plywood or OSB, T & G, PI 40/20, glued and nailed w/ 10d commons at 6", 6", 12"

Provide wall length continuous full depth solid blocking (where floor joists perpendicular) or double floor joist (where joists parallel) for all walls above.

(N) Floor Joists -- 14" TJI 360 @ 16" oc in Simpson ITS Hangers, Typ. (UNO)

(E) Floor Joists -

Denotes Step in Framing. Step Ht. & Extent per Arch.

Waterproofing, flashing, & finish details per Architecturals.

See General Notes & Specifications for additional requirements and material specifications.

All dimensions per Architectural plans

Contractor to VERIFY all dimensions w/ Architectural plans PRIOR to commencement of construction.

GENERAL FOUNDATION NOTES

Please see Soils Report for additional specifications and recommendations. It is the contractor's responsibility to obtain a copy of the soils report from the owner or owners representative.

Prior to the contractor requesting a Building Department foundation inspection, the Soils Engineer shall advise the building inspector in writing that:

a) Building pad was prepared in accordance with soils report
b) Utility trenches have been properly backfilled and compacted, and
c) Foundation excavations, the soil's expansive characteristics and bearing capacity conform to the soils report.

See General Notes & Specifications for additional requirements and material specifications.

All dimensions per Architectural plans

Contractor to VERIFY all dimensions w/ Architectural plans PRIOR to commencement of construction.

Foundation per Details

15" Wide x 18" Embedment w/ (2) #4 Top & Bot. (UNO)

(E) Foundation (to Remain)

(E) Slab-on-Grade (to Remain)

(N) Pad Foundation, Size per Plan w/ #4 @ 12" oc EW, (3) Min.

(E) Pad Foundation

Wood Framed Wall Above (See S-2.2)

HOLDOWN SCHEDULE

TYPE	HOLDOWN[1]	MIN. POST	ANCHOR / EMBEDMENT	DETAILS
A	CS14	(2) 2x	N/A	XX/S-3.2
B	CMSTC16	(2) 2x	N/A	XX/S-3.2
C	CMST14	4x	N/A	XX/S-3.2
D	CMST12	4x	N/A	XX/S-3.2
E	MSTC66B3	(2) 2x	N/A	XX/S-3.2
1	HDU4	(2) 2x	SSTB24 / 21" Min.	XX/S-3.1
2	HDU8	4x	SSTB28L / 25" Min.	XX/S-3.1
3	HDU11	6x6 or 4x8	SB1x30 / 24" Min.	XX/S-3.1
4	HDU14	6x6 or 4x8	SB1x30 / 24" Min.	XX/S-3.1
5	HD19	6x6 or 4x8	PAB10 x 36" / 30" Min.	XX/S-3.1

FOOTNOTES:
1. Shared holdowns to be installed per detail **10/S-1.1**, *Typical Shearwall Intersections*, (UNO)
2. All holdowns shown shall be continued down to the foundation with the same size holdowns and post, (UNO)

SHEARWALL SCHEDULE

NO.	DESCRIPTION: MATERIALS	DBL. SIDED	SILL PLATE	PANEL B'DRY	NAILING[1] SIZE	NAILING[1] SPC'G	TRANSFERS[2] 5/8"Ø[3] AB	SDS[4] Screw	SDWS[5] Screw	A35, LTP4[6,7,8] or LTP5	RBC	16d[9]
6	15/32" CDX Plywood	N	2x	2x	10d	6"	48"	10"	13"	17"	13"	5"
4	15/32" CDX Plywood	N	2x	3x	10d	4"	38"	7"	9"	12"	9"	3"
3	15/32" CDX Plywood	N	2x	3x	10d	3"	29"	6"[10]	7"[10]	9"	7"	-
2	15/32" CDX Plywood	N	2x	3x	10d	2"	23"	4"[10]	5"[10]	7"	5"	-

FOOTNOTES:
1. All nails to be COMMONS. **DO NOT** use box type nails. All "field" nailing to be 12"oc, UNO. Penetration shall be 1-1/2" Min. in framing.
2. All transfers to be installed into min. 1-1/2" thick members, UNO. Where clips are spaced less than 6" oc, stagger clips on each side of wall.
3. All shear walls to have 5/8" anchor bolts, embeded 7" into concrete foundations, with 3"x3"x0.229" thick plate washers, minimum. Washers may be slotted (slot length not to exceed 1-3/4") w/ standard cut washer placed between nut and plate washer. Washers shall extend within 1/2" of the edge of the bottom plate on the sheathed side. At walls sheathed on 2 sides, plate washers shall be alternated to each side of plate. [Governing Bulding Code, Section 2308.3.2] [AF&PA SDPWS 4.3.6.4.3]
4. Simpson SDS 1/4"x5" Screws through 2x sill, or SDS 1/4"x8" Screws through 3x sill or double plates. Install into minimum 1-3/4" thick members (rim and/or blocking). [ICC ESR 2236]
5. Simpson SDWS 0.22"x5" Screws through 2x sill, or SDWS 0.22"x8" Screws through 3x sill or double plates. Install into minimum 1-3/4" thick members (rim and/or blocking). [ICC ES AC233]
6. See details for permitted transfer clip types and locations.
7. Orient LTP4 and LTP5 clips such that the long dimension is horizontal.
8. Where LTP4 clips are installed over shear wall sheathing, fasten with full length 8d common nails.
9. 16d common nails through the sill plate to rim member or blocking.
10. Install screws into 3-1/2" wide continuous member, staggered 1-1/2" apart.
11. Install screws into Glulams or solid sawn member. LSL, LVL, or PSL members are NOT acceptable, UNO.

Ashley&Vance ENGINEERING, INC.
210 East Cota Street
Santa Barbara, CA 93101
(805) 962-9966
www.ashleyvance.com
CIVIL • STRUCTURAL

The use of these plans and specifications shall be restricted to the original site for which they were prepared and publication thereof is expressly limited to such use. Reproduction or publication by any method, in whole or in part, is prohibited. Title to these plans and specifications remain with Ashley & Vance Engineering, Inc. without prejudice. Visual contact with these plans and specifications shall constitute prima facie evidence of the acceptance of these restrictions.

Engineer of Record:

REGISTERED PROFESSIONAL ENGINEER R. PAUL BE CIVIL STATE OF CALIFORNIA
COORDINATION SET NOT FOR BIDDING OR CONSTRUCTION
PLAN REVIEW SET NOT FOR CONSTRUCTION

Kellow Addition

310 E. Micheltorena St.,
Santa Barbara, CA 93101

Revision:

Proj. Engr.:	R. Stier Phone Ext.: 147
Proj. Mngr.:	T. Vance Phone Ext.: 112
Date:	25 Oct. 2021 Scale: 1/4"=1'-0"
A&V Job No.:	21810

FOUNDATION PLAN

S-2.1

DO NOT SCALE THESE DRAWINGS. Refer to Architectural plans for all dimensions.

Oct 25, 2021
11:03:00 AM

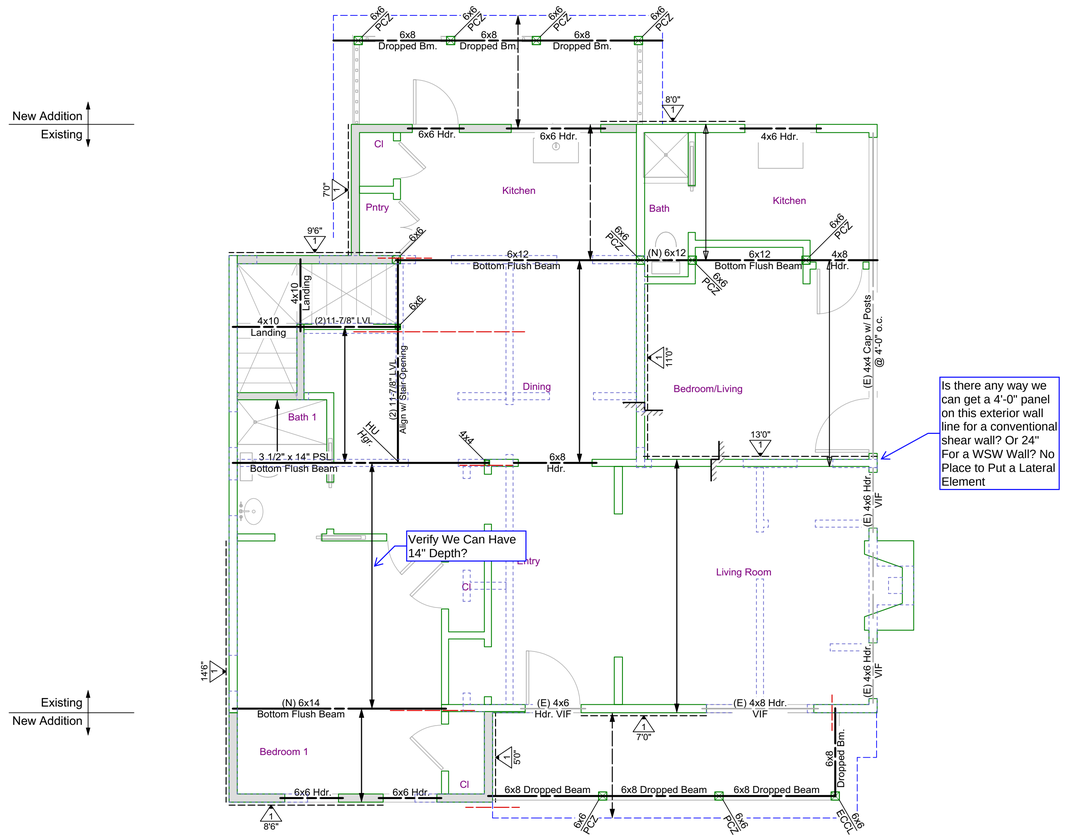

GENERAL FRAMING NOTES

(N) Beams (per Call-out)

(E) Beams (per Call-out)

All Lumber 4x6, 6x6 and Smaller to be DF #2 UNO
All Lumber 4x8, 6x8 and Larger to be DF #1 UNO

All Beams to Bear on Plates w/ Indicated Post or Doubler Below UNO

All Hangers Shall be Installed w/ Max. Nailing per Mfr. & Sized for Full Width & Depth of Supported Members, UNO

Floor sheathing to be 3/4" plywood or OSB, T & G, PI 40/20, glued and nailed w/ 10d commons at 6", 6", 12"

Provide wall length continuous full depth solid blocking (where floor joists perpendicular) or double floor joist (where joists parallel) for all walls above.

(N) Floor Joists -- 14" TJI 360 @ 16" oc in Simpson ITS Hangers, Typ. (UNO)

(N) Deck Joists -- 2x12 @ 16" oc Ripped to Slope per Arch (7-1/2" Min. Depth) in Simpson U Hangers. (UNO)

Denotes Step in Framing. Step Ht. & Extent per Arch.

Waterproofing, flashing, & finish details per Architecturals.

See General Notes & Specifications for additional requirements and material specifications.

All dimensions per Architectural plans

Contractor to VERIFY all dimensions w/ Architectural plans PRIOR to commencement of construction. **Contractor shall verify all existing conditions prior to construction & contact Engineer and Architect regarding any discrepancies.**

WALL SCHEDULE

Stud wall locations per Architecturals.

(E) Wood Frame Wall to Remain

Struc. Wood-Framed Wall, Thk. per Arch.

2x4 D.F. Stud @ 16" oc, Min.

All Walls to have Continuous Double Top Plates, All Splices to be per Detail **7/S-1.1**

Walls above

(shown for clarity)

SHEARWALL SCHEDULE

NO.	MATERIALS	DBL. SIDED	SILL PLATE	PANEL B'DRY	NAILING[1] SIZE	NAILING[1] SPC'G	TRANSFERS[2] 5/8"Ø[3] AB	SDS[4] Screw	SDWS[5] Screw	A35, LTP4[6,7,8] or LTP5	RBC	16d[9]
5	15/32" CDX Plywood	N	2x	2x	10d	6"	48"	10"	13"	17"	13"	5"
4	15/32" CDX Plywood	N	2x	3x	10d	4"	38"	7"	9"	12"	9"	3"
3	15/32" CDX Plywood	N	2x	3x	10d	3"	29"	6"[10]	7"[10]	9"	7"	-
2	15/32" CDX Plywood	N	2x	3x	10d	2"	23"	4"[10]	5"[10]	7"	5"	-

FOOTNOTES:
1. All nails to be COMMONS. **DO NOT** use box type nails. All "field" nailing to be 12"oc, UNO. Penetration shall be 1-1/2" Min. in framing.
2. All transfers to be installed into min. 1-1/2" thick members, UNO. Where clips are spaced less than 6" oc, stagger clips on each side of wall.
3. All shear walls to have 5/8" anchor bolts, embeded 7" into concrete foundations, with 3"x3"x0.229" thick plate washers, minimum. Washers may be slotted (slot length not to exceed 1-3/4") w/ standard cut washer placed between nut and plate washer. Washers shall extend within 1/2" of the edge of the bottom plate on the sheathed side. At walls sheathed on 2 sides, plate washers shall be alternated to each side of plate. [Governing Bulding Code, Section 2308.3.2] [AF&PA SDPWS 4.3.6.4.3]
4. Simpson SDS 1/4"x5" Screws through 2x sill, or SDS 1/4"x8" Screws through 3x sill or double plates. Install into minimum 1-3/4" thick members (rim and/or blocking). [ICC ESR 2236]
5. Simpson SDWS 0.22"x5" Screws through 2x sill, or SDWS 0.22"x8" Screws through 3x sill or double plates. Install into minimum 1-3/4" thick members (rim and/or blocking). [ICC ES AC233]
6. See details for permitted transfer clip types and locations.
7. Orient LTP4 and LTP5 clips such that the long dimension is horizontal.
8. Where LTP4 clips are installed over shear wall sheathing, fasten with full length 8d common nails.
9. 16d common nails through the sill plate to rim member or blocking.
10. Install screws into 3-1/2" wide continuous member, staggered 1-1/2" apart.
11. Install screws into Glulams or solid sawn member. LSL, LVL, or PSL members are NOT acceptable, UNO.

Ashley&Vance ENGINEERING, INC.
210 East Cota Street
Santa Barbara, CA 93101
(805) 962-9966
www.ashleyvance.com
CIVIL • STRUCTURAL

The use of these plans and specifications shall be restricted to the original site for which they were prepared and publication thereof is expressly limited to such use. Reproduction or publication by any method, in whole or in part, is prohibited. Title to these plans and specifications remain with Ashley & Vance Engineering, Inc. without prejudice. Visual contact with these plans and specifications shall constitute prima facie evidence of the acceptance of these restrictions.

Engineer of Record:

REGISTERED PROFESSIONAL ENGINEER R. PAUL BE CIVIL STATE OF CALIFORNIA
COORDINATION SET NOT FOR BIDDING OR CONSTRUCTION
PLAN REVIEW SET NOT FOR CONSTRUCTION

Kellow Addition

310 E. Micheltorena St.,
Santa Barbara, CA 93101

Revision:

1	
2	
3	
4	
5	
6	
7	
8	
9	

Proj. Engr.:	R. Stier	Phone Ext.:	147
Proj. Mngr.:	T. Vance	Phone Ext.:	112
Date:	25 Oct. 2021	Scale:	1/4"=1'-0"
A&V Job No.:	21810		

FLOOR FRAMING PLAN

S-2.2

DO NOT SCALE THESE DRAWINGS. *Refer to Architectural plans for all dimensions.*

Oct 25, 2021
11:03:01 AM

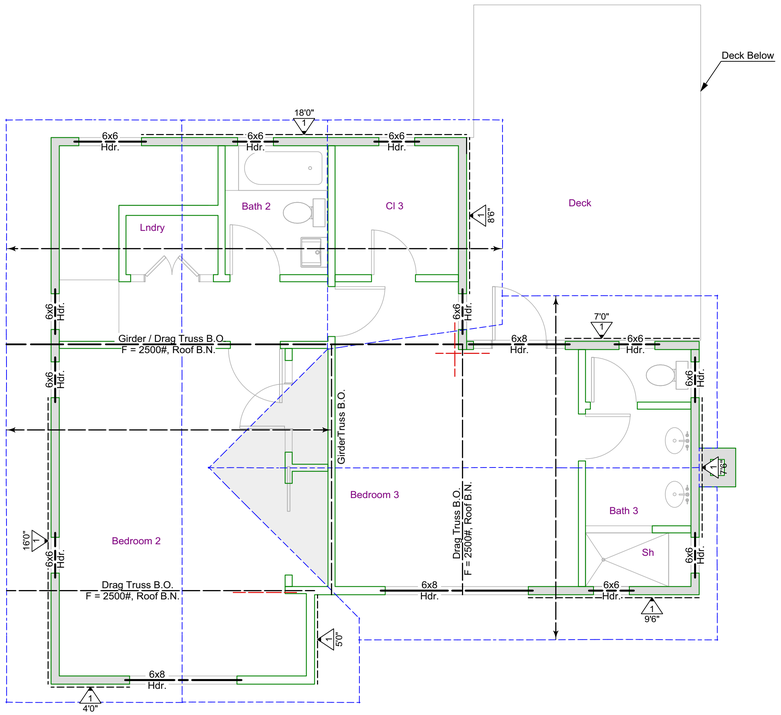

Denotes Approximate Areas of Overbuild. Overbuild Framing Consists of 2x8 Ridge, 2x6 Rafters, with 2x4 Vertical Supports @ 48" o.c., Staggered.

TRUSS DRAWINGS

Manufactured truss (i.e. prefabricated truss) drawings are required. Truss drawings must be received by the Architect (or designer) in time to ensure adequate coordination with Structural Engineer. Refer to the Material Specifications for additional requirements. Truss drawings shall include (but are not limited to) the following:

1. All connections related to trusses (i.e. truss to truss, conventional framing to truss, truss to top plate, etc.
2. All related bracing for trusses.
3. Any camber needed to minimize excessive deflection.
4. Adequate design to prevent any lateral movement.
5. Adequate design to sustain any vertical load.
6. The builder agrees to hold the Architect (or Designer) & the Engineer harmless for omissions due to delayed receipt of truss drawings.

All truss engineering, drawings, truss types, and detailed shop drawings shall be approved by the project engineer prior to the installation of the trusses.

GENERAL FRAMING NOTES

Beams (per Call-out)

All Lumber 4x6, 6x6 and Smaller to be DF #2 UNO
All Lumber 4x8, 6x8 and Larger to be DF #1 UNO

All Beams to Bear on Plates w/ Indicated Post or Doubler Below UNO

All Hangers Shall be Installed w/ Max. Nailing per Mfr. & Sized for Full Width & Depth of Supported Members, UNO

Roof sheathing to be 1/2" plywood or OSB, PI 24/0, nailed w/ 10d commons at 6", 6", 12"

Pre-Fabricated Roof Trusses (by Others) @ 24" oc
All Truss to Truss Hangers per Mfr., Typ. (UNO)

Waterproofing, flashing, & finish details per Architecturals.

See General Notes & Specifications for additional requirements and material specifications.

All dimensions per Architectural plans

Contractor to VERIFY all dimensions w/ Architectural plans PRIOR to commencement of construction.

WALL SCHEDULE

Stud wall locations per Architecturals.

Non-Struc. Wood-Framed Wall, Thk. per Arch.

2x4 D.F. Stud @ 16" oc, Min.

Struc. Wood-Framed Wall, Thk. per Arch.

2x4 D.F. Stud @ 16" oc, Min.

All Walls to have Continuous Double Top Plates, All Splices to be per Detail **7/S-1.1**

SHEARWALL SCHEDULE

NO.	MATERIALS	DBL SIDED	SILL PLATE	PANEL B'DRY	NAILING[1] SIZE	NAILING[1] SPC'G	TRANSFERS[2] 5/8"Ø[3] AB	SDS[4] Screw	SDWS[5] Screw	A35, LTP4[6,7,8] or LTP5	RBC	16d[9]
6	15/32" CDX Plywood	N	2x	2x	10d	6"	48"	10"	13"	17"	13"	5"
4	15/32" CDX Plywood	N	2x	3x	10d	4"	38"	7"	9"	12"	9"	3"
3	15/32" CDX Plywood	N	2x	3x	10d	3"	29"	6"[10]	7"[10]	9"	7"	-
2	15/32" CDX Plywood	N	2x	3x	10d	2"	23"	4"[10]	5"[10]	7"	5"	-

FOOTNOTES:

1. All nails to be COMMONS. **DO NOT** use box type nails. All "field" nailing to be 12"oc, UNO. Penetration shall be 1-1/2" Min. in framing.
2. All transfers to be installed into min. 1-1/2" thick members, UNO. Where clips are spaced less than 6" oc, stagger clips on each side of wall.
3. All shear walls to have 5/8" anchor bolts, embeded 7" into concrete foundations, with 3"x3"x0.229" thick plate washers, minimum. Washers may be slotted (slot length not to exceed 1-3/4") w/ standard cut washer placed between nut and plate washer. Washers shall extend within 1/2" of the edge of the bottom plate on the sheathed side. At walls sheathed on 2 sides, plate washers shall be alternated to each side of plate. [Governing Bulding Code, Section 2308.3.2] [AF&PA SDPWS 4.3.6.4.3]
4. Simpson SDS 1/4"x5" Screws through 2x sill, or SDS 1/4"x8" Screws through 3x sill or double plates. Install into minimum 1-3/4" thick members (rim and/or blocking). [ICC ESR 2236]
5. Simpson SDWS 0.22"x5" Screws through 2x sill, or SDWS 0.22"x8" Screws through 3x sill or double plates. Install into minimum 1-3/4" thick members (rim and/or blocking). [ICC ES AC233]
6. See details for permitted transfer clip types and locations.
7. Orient LTP4 and LTP5 clips such that the long dimension is horizontal.
8. Where LTP4 clips are installed over shear wall sheathing, fasten with full length 8d common nails.
9. 16d common nails through the sill plate to rim member or blocking.
10. Install screws into 3-1/2" wide continuous member, staggered 1-1/2" apart.
11. Install screws into Gluams or solid sawn member. LSL, LVL, or PSL members are NOT acceptable, UNO.

Ashley&Vance ENGINEERING, INC.
210 East Cota Street
Santa Barbara, CA 93101
(805) 962-9966
www.ashleyvance.com
CIVIL • STRUCTURAL

The use of these plans and specifications shall be restricted to the original site for which they were prepared and publication thereof is expressly limited to such use. Reproduction or publication by any method, in whole or in part, is prohibited. Title to these plans and specifications remain with Ashley & Vance Engineering, Inc. without prejudice. Visual contact with these plans and specifications shall constitute prima facie evidence of the acceptance of these restrictions.

Engineer of Record:

REGISTERED PROFESSIONAL ENGINEER R. PAUL BE CIVIL STATE OF CALIFORNIA

PLAN REVIEW SET NOT FOR CONSTRUCTION

COORDINATION SET NOT FOR BIDDING OR CONSTRUCTION

Kellow Addition

310 E. Micheltorena St.,
Santa Barbara, CA 93101

Revision:

Proj. Engr.:	R. Stier Phone Ext.: 147
Proj. Mngr.:	T. Vance Phone Ext.: 112
Date:	25 Oct. 2021 Scale: 1/4"=1'-0"
A&V Job No.:	21810

ROOF FRAMING PLAN

S-2.3

DO NOT SCALE THESE DRAWINGS. Refer to Architectural plans for all dimensions.

Oct 25, 2021
11:03:02 AM